WESTERBEKE D-NET™ DIESEL GENERATOR

8.0 EDT 60Hz
6.0 EDT 50Hz

Available fully networked to NMEA 2000®

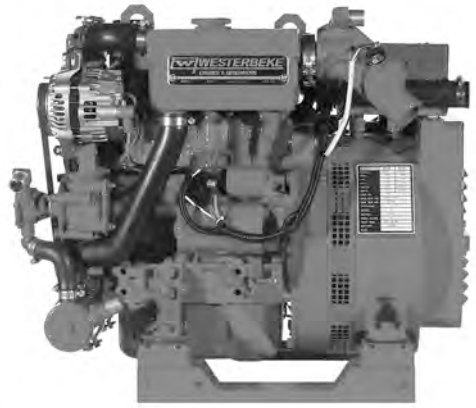

8.0/6.0 EDT Marine Diesel Generator

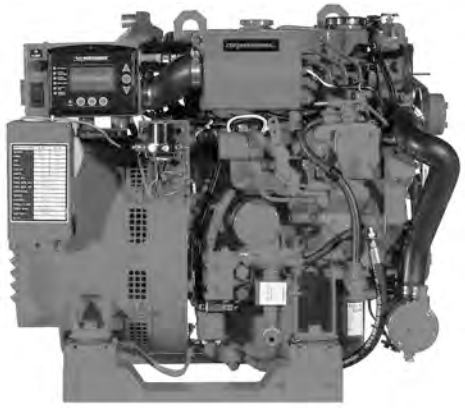

8.0/6.0 EDT Marine Diesel Generator

The First Electronic Diesel Generators Available NMEA 2000® Certified

Westerbeke, the **first** company to bring constant speed **EFI** generators and **Safe-CO**™ generators to the marine market, introduces another first. The wave of the future, Westerbeke D-NET™ electronic generators are offered with standard Westerlink™ or optional NMEA 2000® compliant databus communication. NMEA 2000® is a network for shipboard communications developed under National Marine Electronics Association (NMEA) standards. NMEA 2000® generators, combined with other certified components, allow boat builders and their customers to significantly reduce the cost, weight and space normally required to run cables throughout the vessel. All certified components freely communicate and are linked to just one NMEA 2000® cable using "T" connections that simplify networking.

Information At Your Fingertips

All Westerbeke D-NET™ generators have available digital controls offering simplified and easy to understand information on operational status and, if necessary, system diagnostics. Westerbeke also features "at a glance" illuminated lights indicating proper operation. They monitor battery voltage, generator voltage, generator frequency, oil pressure, coolant and exhaust temperature. All this information may be viewed from a distance—all green lights indicate referenced systems are functioning properly. Further details are available on the screen display. The user may conveniently scroll for operational or diagnostic information without encountering "codes". Westerbeke uses text so the user does not have to refer to a manual to decipher numeric information.

Quiet, Slow-Speed Digital Operation

Operating at 1800-rpm with a newly designed, tuned air intake silencer and 3-cylinder engine, the 8.0 EDT generator runs smooth and quiet. Augmenting this desired effect is the electronic governing that virtually eliminates "droop" when load is applied. Include the optional Sound Guard SST with high quality stainless steel base and frame with stylish powder coated aluminum panels and you have a generator as attractive as it is quiet.

Standard Features

- Digital display and diagnostics panel
- Electronic governing
- Safety shut-downs: overspeed, underspeed, low oil pressure, high exhaust and high coolant temperature
- AC circuit breaker
- 50 amp battery charging alternator
- Power take-off interface
- Self-bleeding fuel system
- Fresh water cooling and coolant recovery tank
- 45 degree water injected exhaust elbow
- Gear driven raw water pump
- Tuned air intake silencer
- Anti-vibration mounts – fail safe rubber type
- Lube oil drain hose and drip tray
- Oil fill – top and side
- Belt guard
- Operators' Manual and parts list
- 5-year limited warranty
- Complies with U.S. EPA regulations

Digital Display

WESTERBEKE Engines & Generators

WESTERBEKE D-NET™ DIESEL GENERATOR 8.0 EDT 60Hz 6.0 EDT 50Hz

WESTERBEKE™ Engines & Generators

Generator Design

DESIGN: Brushless, four pole, revolving, power take-off.
VOLTAGE REGULATION: Standard +/- 5% no load to full load.
FREQUENCY REGULATION: .5 Hz (.60%) no load to full load.
INSULATION: Class "H", as defined by NEMA MG1-1.65.
TEMPERATURE RISE: Within NEMA MG1-22.40 definition when operating at full load.
COOLING: Cast centrifugal blower, direct connected.
ELECTROMAGNETIC INTERFERENCE LEVEL: Exceeds requirements for most marine radio-telephones and standard TVs.

	Electrical Characteristics					Ratings		Engine	
Model	**Volts**	**Amps**	**Hertz**	**Phase**	**Wire**	**Power Factor**	**KW**	**RPM**	**Start**
8.0 EDT-614*	**120/240**	**66.7/33.3**	**60**	**1**	**4**	**1.0**	**8.0**	**1800**	**Remote**
6.0 EDT-514*	**230**	**26.1**	**50**	**1**	**4**	**1.0**	**6.0**	**1500**	**Remote**

* Adjustable to 50 or 60 Hertz.

Specifications

Number of cylinders	3 Cylinder vertical in-line
Type	4 cycle
Displacement	80.43 cu. in. (1.318 liter)
Bore and stroke	3.07" x 3.62" (78 mm x 92 mm)
Compression ratio	22:1
Rated rpm @ 60/50 Hz	1800/1500
HP @ 1800/1500 rpm	18.9/16.5
Maximum angle of continuous operation	Not to exceed 15° in all directions
Exhaust elbow connection	2" OD (50.8mm)
Sea water connection	1" OD (25.4mm)
Dry weight	477 lbs. (216 kilos)
Combustion system	Swirl type
Aspiration	Naturally aspirated
Lubrication system	Forced lubrication by gear pump
Cooling system	5 quarts (4.7 liters)
Starting aid	12 volt sheathed type glow plug
Full load fuel consumption @1800 rpm	0.82 GPH (3.1 LPH) (approx.)
Full load fuel consumption @1500 rpm	0.65 GPH (2.5 LPH) (approx.)
Fuel injection pump	Bosch type, with solenoid shutoff
Governor	Electronic
Injectors	Throttle type
Fuel Filter	Secondary, replaceable type
Fuel transfer pump	12 volt electric type
Fuel supply and return piping	1/4" ID (6.35 mm) minimum 3/8" ID (9.53 mm) maximum
Lube oil filter	Full flow, spin-on element
Lubricant capacity	4 quarts (3.8 liters)
Starting motor	12 volt, solenoid, actuated shift
Alternator	50 amps
Cold cranking amps	240
Electrical system	12 volts DC, negative ground

Construction – Engine Components

Cylinder head	Cast Iron
Cylinder block	Cast Iron
Crankshaft	Forged crankshaft, four main bearings
Valves	Overhead valves, rotating type
Fuel System	Self–bleeding
Intake system	Tuned intake silencer for maximum noise reduction
Cooling system	Fresh water-cooled with heat exchanger
Exhaust manifold	Cast aluminum, fresh water-cooled

Optional Equipment

- NMEA 2000® compliant databus communication
- Remote digital display (NMEA 2000®)
- Remote digital display (Westerlink™)
- Remote start/stop for use with Westerlink™ or NMEA 2000® version
- Sound Guard SST (PN 53462)
- Hydro-hush muffler and fittings; fuel water separator
- Anti-siphon valve with 1" inch stainless steel loop
- Ship–to–shore switch; power take-off adapter
- "A" on board spare parts kit; "B" extended cruising spare parts kit
- Technical manual
- Generator set available painted white upon request (standard red)

Dimensions

Inches
(millimeters)

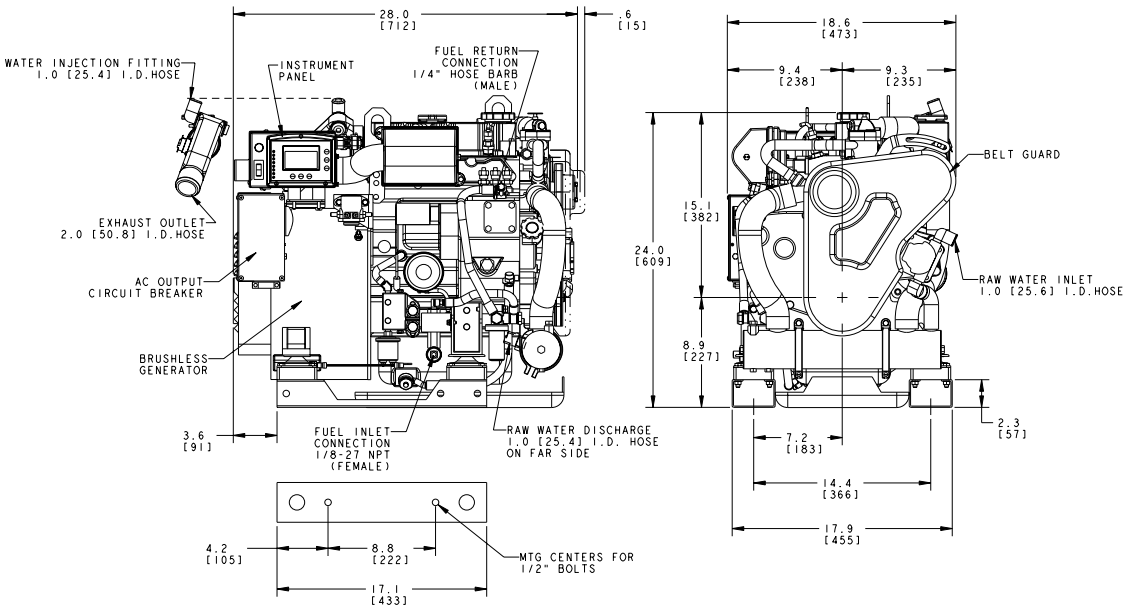

Optional
Sound Guard **SST**

PN 53462
(for digital model only)

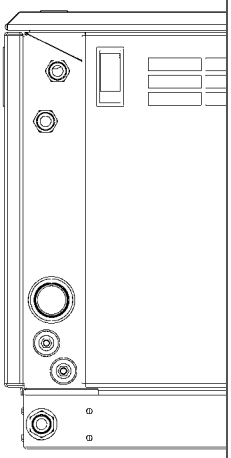

SST

Length: 36.1" (917mm)
Width: 23.2" (589mm)
Height: 25.3" (643mm)
Weight: 90 lbs. (41kg)

Westerbeke Corp., Myles Standish Industrial Park, 150 John Hancock Road, Taunton, MA 02780-7319, U.S.A. • Telephone: (508) 823-7677 • Fax: (508) 884-9688 • Website: www.westerbeke.com

Specifications Subject to Change without Notice.