94 / 94LY-Series Alternators

94LY-Series Alternators

Designed expressly for use on Yanmar 6LY diesel engines, these 12-volt and 24-volt alternators are engineered for use with external multi-stage voltage regulation, making it possible to tailor charging voltage to maximize safety and efficiency when replenishing a wide variety of battery types.

A 3.15” I.D. saddle style mount enables the 94LY alternator to replace the standard internally-regulated OEM alternator on Yanmar’s 6LY engines, and on other engines with like mounting and belt configurations. Custom-wound rotor/stator combinations optimize output across the typical diesel powerband.

Isolated ground provides sure continuity to system ground. Included in the 94LY-Series alternator family are: 165-amp/12-volt; 210-amp/12-volt; and 140-amp/24-volt models. All models meet U.S. Coast Guard Title 33 standards for ignition protection.

Balmar’s 94-Series, large case alternators deliver the size and charging output required to support battery banks of up to 800 amp hours at 12 volts or 400 amp hours at 24 volts.

Designed expressly for use on diesel engines utilizing a 2” Delco-style single foot mount, these 12-volt and 24-volt alternators are engineered for use with external multi-stage voltage regulation, making it possible to tailor charging voltage to maximize safety and efficiency when charging a variety of battery types.

Custom-wound rotor/stator combinations optimize output across the typical diesel powerband. Isolated ground provides sure continuity to system ground. Included in the 94-Series alternator family are: 165-amp/12-volt; 210-amp/12-volt; and 140-amp/24-volt models. All models meet U.S. Coast Guard Title 33 standards for ignition protection.

94-Series Alternator Models

Model	Volts	Amps	Mounting Style	Alternator Profile
94-12-165-IG	12	165A	2” Single Foot (Spindle)	
94-12-210-IG	12	210A	2” Single Foot (Spindle)	
94-24-140-IG	24	140A	2” Single Foot (Spindle)	

94-Series Alternator Models

Model	Volts	Amps	Mounting Style	Alternator Profile
94LY-12-165-IG	12	165A	3.15” I.D. Saddle (Hitachi Style)	
94LY-12-210-IG	12	210A	3.15” I.D. Saddle (Hitachi Style)	
94LY-24-140-IG	24	140A	3.15” I.D. Saddle (Hitachi Style)	

Balmar

18930 59th Ave. NE, Arlington, WA 98223 Phone: 360-435-6100, Fax: 360-435-3210, E-Mail: balmar@balmar.net

©2010 Ballard Commercial Industries, Inc. Permission required for reprint.

94 / 94LY-Series Alternator Specifications

Alternator Style: Large case, positive field excitation

Regulation: External p-type

Case Construction: Ventilated cast aluminum

Finish: White powdercoating

Cooling: Bi-directional external fan (94-Series), Uni-directional, clockwise rotational fan (94LY-Series)

Bearings: Sealed ball bearing. Heavy duty radial (front). Heavy duty needle (rear)

Available Outputs: 80A/12V, 110A/12V

Mounting Styles: 3.15" I.D. Saddle (Model 94LY), 2" Single Foot (Model 94)

Mounting Foot Bore: 10mm (Model 94LY), ½" (Model 94)

Grounding: Isolated ground terminal

Positive Output: Threaded stud. Stud dimensions: M8 x 1.25

AC/Stator Output: 12 pulse.

Normal/Maximum Operating Temperature: 180°F/82°C / 225°F/108°C

Low RPM Cut-In/Maximum Alternator RPM: 1320rpm / 15000rpm

Diodes +/-: 6 (positive), 6 (negative); 50A/200V

Ignition Protection Rating: USCG Title 33

94 / 94LY-Series 12-Volt & 24-Volt Alternator Output Curves

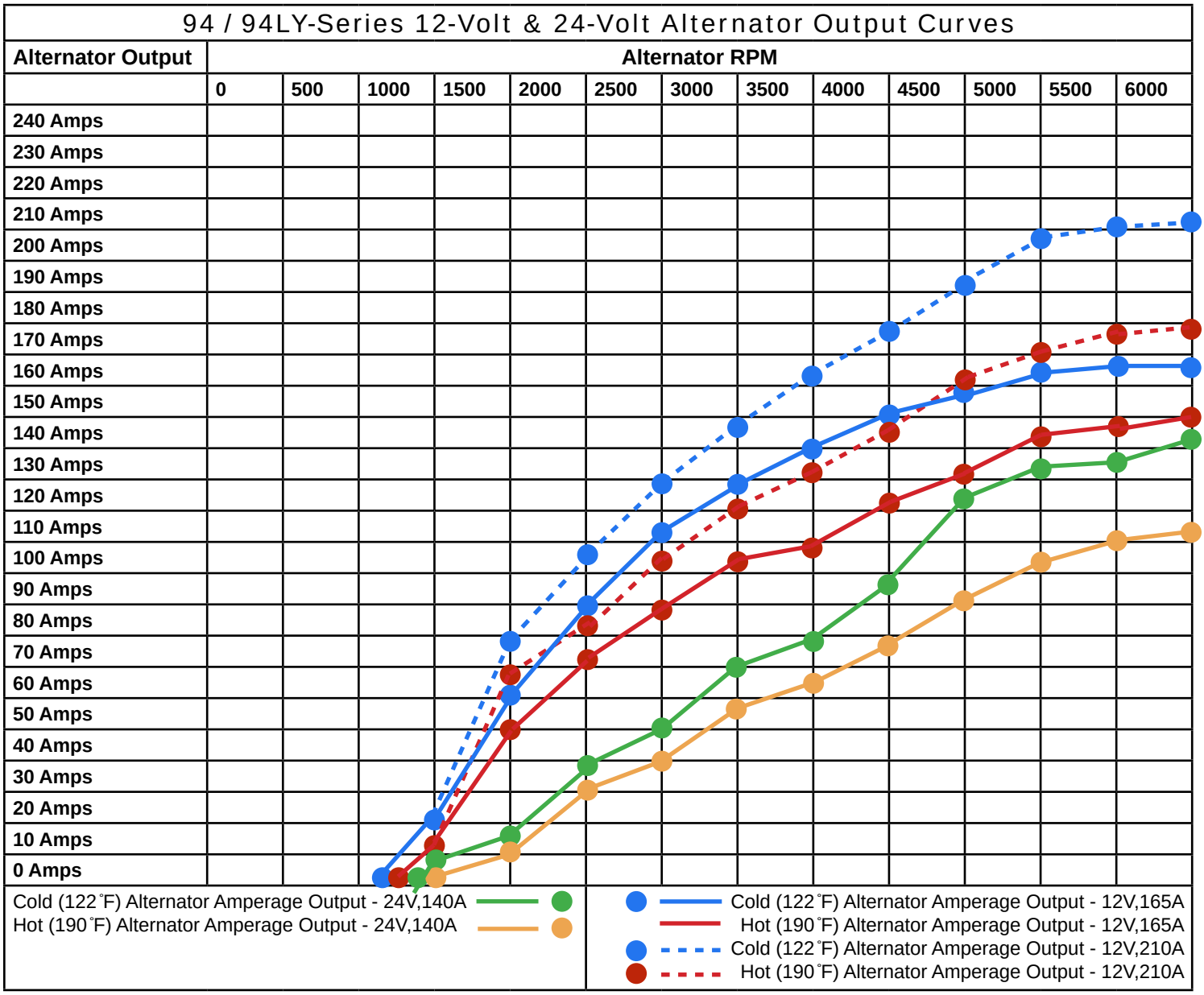

Balmar

18930 59th Ave. NE, Arlington, WA 98223 Phone: 360-435-6100, Fax: 360-435-3210, E-Mail: balmar@balmar.net

©2010 Ballard Commercial Industries, Inc. Permission required for reprint.

SERIES 94 ALTERNATOR DIMENSIONS

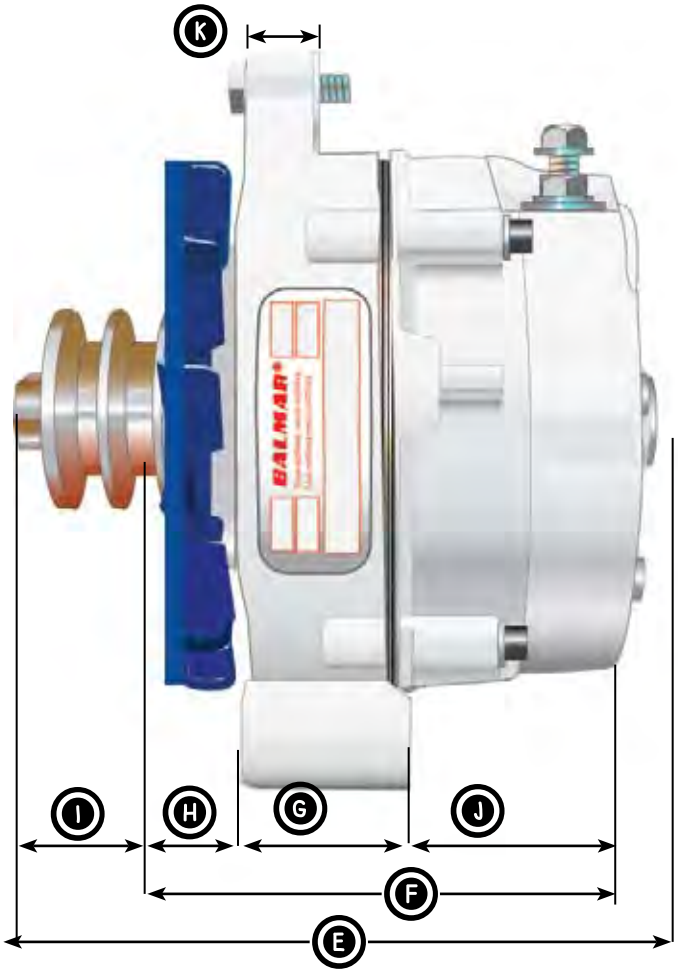

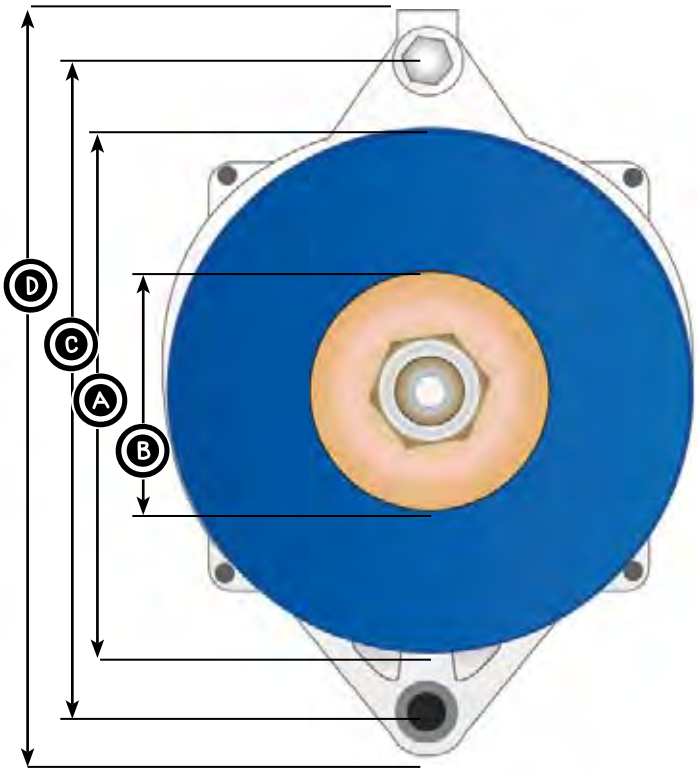

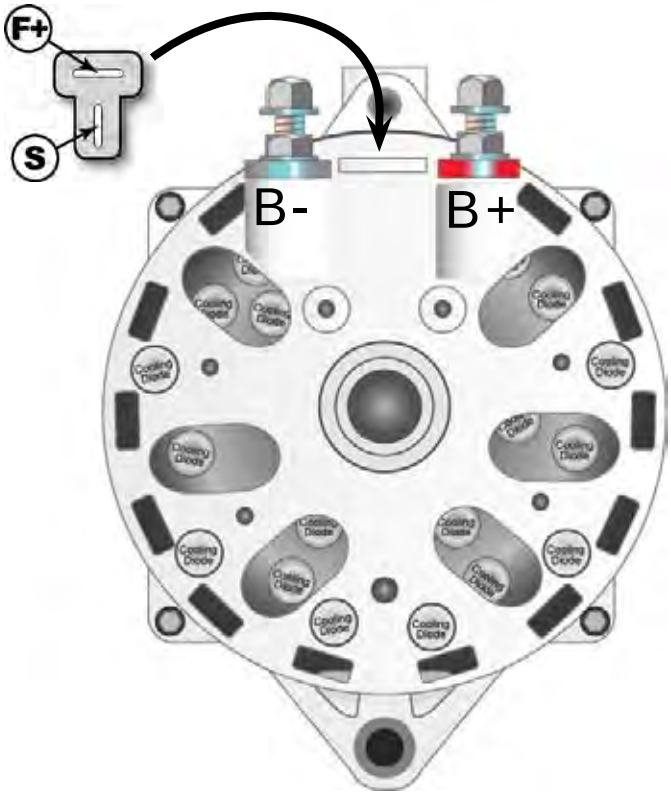

ITEM	DESCRIPTION	IN.	MM
A	Case Diameter	6.0	152.4
B	Std. Pulley Diameter	2.9	73.7
C	Bolt-to-Bolt Center	8.0	203.2
D	Overall Height	9.0	228.6
E	Overall Length	7.0	177.8
F	Inside sheave center to case rear	6.0	152.4
G	Mounting Foot Width	2.0	50.8
H	Inside sheave to mounting foot	1.0	25.4
I	Front to inside sheave center	1.0	25.4
J	Mounting foot to case rear	3.0	76.2
K	Tensioning arm width	1.0	25.4

ADDITIONAL ALTERNATOR MEASUREMENTS	
	Dimension
Mounting Foot Bore	1/2” / 12.7mm
Tensioning Arm Bore	5/16” / 7.9mm
Positive Output Post	5/16” x 18
Field Input Terminal	1/4” spade
Ground Post	5/16” x 18
Stator/Tach Output Terminal	1/4” spade

TERMINAL CONNECTION LOCATIONS	
B+	Positive Output Terminal
S	Stator/Tach Output Terminal
F+	External Field Input Terminal
B-	Case Ground Terminal

SERIES 94LY ALTERNATOR DIMENSIONS

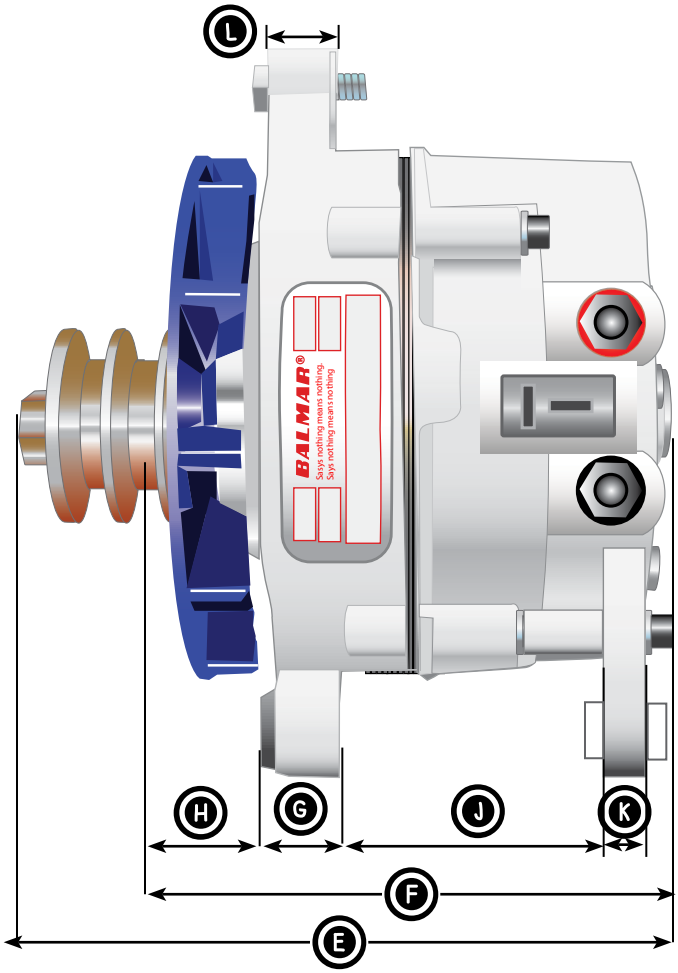

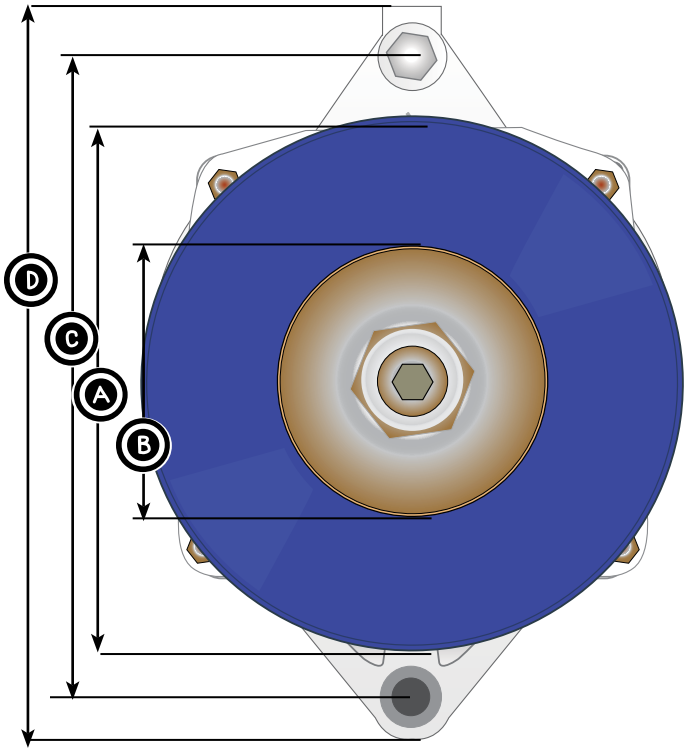

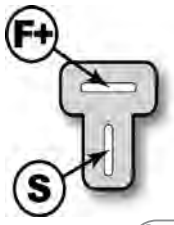

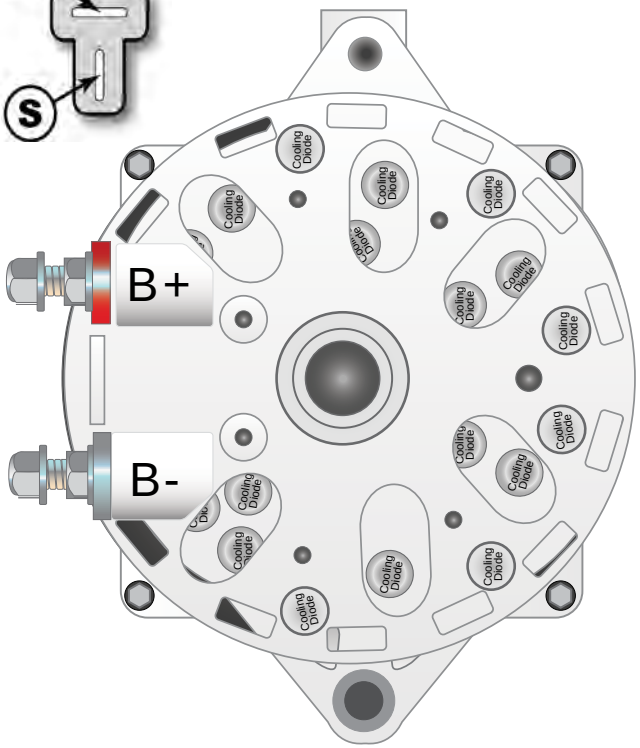

ITEM	DESCRIPTION	IN.	MM
A	Case Diameter	6.4	164.0
B	Std. Pulley Diameter	2.7	68.6
C	Bolt-to-Bolt Center	8.0	203.2
D	Overall Height	9.0	228.6
E	Overall Length	7.0	177.8
F	Inside sheave center to case rear	6.1	152.4
G	Mounting Foot Width	.88	22.8
H	Inside sheave to mounting foot	.90	25.4
J	Saddle width (ID)	3.15	80
K	Rear foot	.55	14.0
	Rear Bushing .93”/ 23.6 (10mm bore)		
L	Tensioning arm width	1.0	25.4
ADDITIONAL ALTERNATOR MEASUREMENTS			
Positive Output Post		5/16 x 18	
Ground Post		5/16 x 18	
Stator/Tach Output Post		1/4” spade	

TERMINAL CONNECTION LOCATIONS	
B+	Positive Output Terminal
S	Stator/Tach Output Terminal
F+	External Field Input Terminal
B-	Isolated Ground Terminal