FUEL INJECTORS

REMOVING THE INJECTORS

NOTE: *Injector must be serviced in a "clean room" environment.*

1. Disconnect the high pressure lines from the injectors and loosen the lines at their attachment to the injection pump and move them out of the way of the injectors. Avoid bending the lines.
2. Using a 17mm long socket, remove the fuel return line in its entirety from the top of the injectors. Take care not to lose the two sealing washers and banjo bolt that attaches the fuel return line to each injector.

   NOTE: *Clean the area around the base of the injector prior to lifting it out of the cylinder head to help prevent any rust or debris from falling down into the injector hole. If the injector will not lift out easily and is held in by carbon build up or the like, work the injector side to side with the aid of the 17mm deep socket wrench to free it and then lift it out.*

3. The injector seats in the cylinder head on a copper sealing washer. This washer should be removed with the injector and replaced with a new washer when the injector is reinstalled.

INJECTION TESTING

1. Using the nozzle tester, check the spray pattern and injection starting pressure of nozzle and, if it exceeds the limit, adjust or replace the nozzle. When using nozzle tester, take the following precautions:

   ⚠ CAUTION: ***The spray injected from the nozzle is of such velocity that it may penetrate deeply into the skin of fingers and hands, destroying tissue. If it enters the bloodstream, it may cause blood poisoning.***

   a. If the diesel fuel of the nozzle tester is discolored, replace it. At the same time, clean or replace the filter.
   b. Set the nozzle tester in a clean place where there is no dust or dirt.
   c. Mount the nozzle and nozzle holder on the nozzle tester.
   d. Use the fuel at the approximate temperature of 68° F (20° C)
   e. Operate the hand lever of nozzle tester several times to bleed the air in the nozzle line, then move the hand lever at intervals of one stroke per second while reading the injection starting pressure.

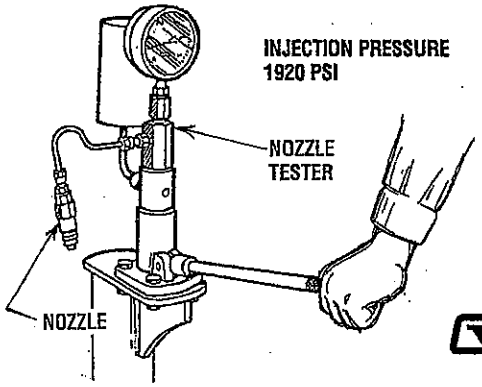

Inspecting Spray Pattern

1. Operate the hand lever of the nozzle tester at intervals of one stroke per second to check if the fuel is injected correctly in its axial direction. A nozzle is defective if it injects fuel in an oblique direction or in several separate strips. Also, a spray in the form of particles indicates a defect. These defects may sometimes be caused by clogging with dust and, therefore, all parts should be carefully cleaned before reassembly. (Care should be taken not to expose ones skin to this spray as it may penetrate the skin and cause infection.)

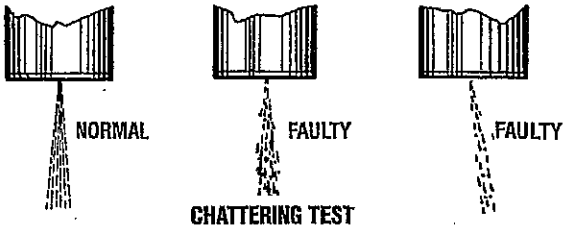

2. Apply the pressure of 1635 lb/in² (115 kg/cm²) to nozzle by operating the hand lever, and check the drips from the nozzle tip. If it drips or has a large accumulation of fuel on the bottom, it is considered defective and should be replaced. A very small amount of fuel may sometimes remain on the tip of the nozzle; however, this does not indicate a defect.

The injection starting pressure for the injectors is adjusted by increasing or decreasing the thickness of the adjusting shim.

The shim has 10 different thicknesses for every 0.0020 in (0.05 mm), between 0.0049in (1.25mm) to 0.0669in (1.7mm) With each 0.0020in (0.05mm) increase, injection pressure is increased approximately 71.1 lb/in² (5.0 kg/cm²). When replacing the shim, grip the retaining nut in a vise and remove the body with a wrench. Tighten the retaining nut to the specified torque:

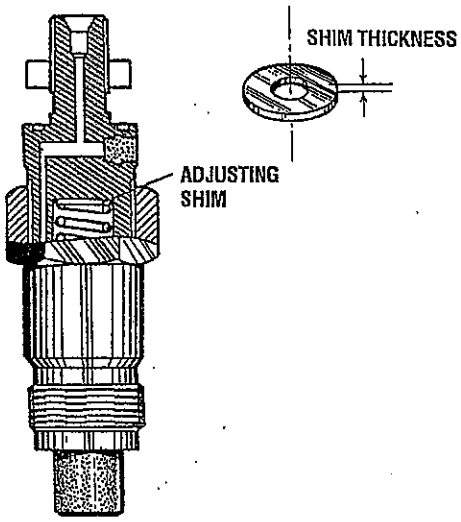

FUEL INJECTION TIMING

PREPARATION

a. Close the fuel shut-off valve.

b. Disconnect the No.1 fuel injection pipe from the cylinder head and injection pump.

c. Remove No.1 delivery valve holder from the injection pump. Remove the delivery valve and spring from the holder. Restore the delivery valve holder only to the injection pump.

d. Connect the fuel injection pipe to the injection pump.

e. Hold the speed control lever in the low speed position. (Generator) remove the fuel shut-off solenoid.

INSPECTION [Fuel Flow Method]

a. Open the fuel shut-off valve. Turn the hey switch to the ON position and press preheat.

NOTE: *Fuel will come from the injection pipe with high pressure when the starter switch key is turned to ON position if the engine is equipped with an electric fuel pump. Direct fuel flow into the container.*

b. Slowly turn the crankshaft clockwise, looking at the open end of the injection pipe. The instant fuel stops coming out is the fuel injection timing.

NOTE: *Turn the crankshaft in reverse direction just a little and do step b again to verify the injection timing.*

c. The fuel injection timing is correct if the IT mark on the crankshaft pulley is aligned with the mark on the timing gear case when fuel stops from the injection pipe.

FUEL INJECTION TIMING: BTDC 17° (STANDARD)

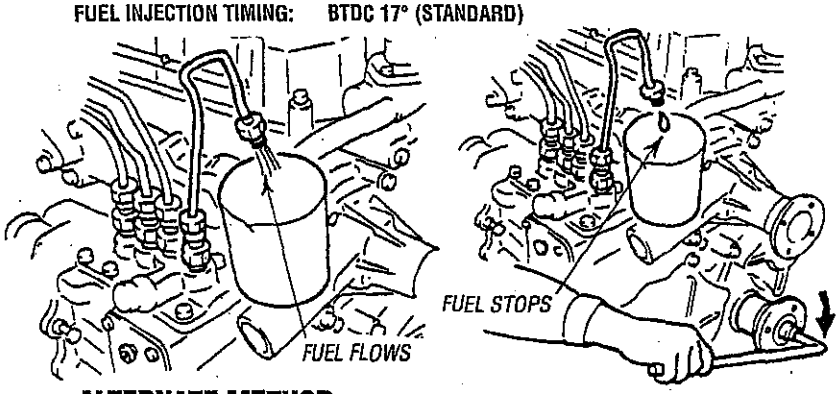

ALTERNATE METHOD

In the fuel flow method, the delivery valve has to be removed. As a result, there is a good chance for dirt particles to get inside the fuel injection pump. In this alternate method, however, it is not necessary to remove the delivery valve.

a. Disconnect No.1 fuel injection pipe at the fuel injection nozzle (cylinder head).

b. Prime the fuel system.

c. Slowly turn the crankshaft clockwise until fuel just swells at the free end of the injection pipe and, at that instant, check the position of the IT mark with respect to the mark on the gear case. This timing is approximately 1° retarded. Take this 1° retardation into account when making a shim adjustment.

ADJUSTMENT

a. If the fuel injection timing is incorrect, change the thickness of shims under the fuel injection pump. An increase or decrease of the shims by 0.1mm (0.004 in) will vary the timing by 1°.

b. Increase the thickness of the shims to retard the timing or decrease it to advance the timing.

ADJUSTMENT RANGE: STANDARD ± 1.5°

Four kinds of shims are available in thicknesses 0.2mm (0.0079 in), 0.3mm (0.0118 in), 0.4mm (0.0157 in) and 0.8mm (0.0315 in). These shims have no identification, measure the thickness of each shim with calipers before using it.

> ⚠ **CAUTION:** ***Apply sealant to both faces of each shim to prevent oil leaks.***

c. After the timing has been adjusted, make sure it is correct.

d. Close the fuel filter valve and restore the delivery valve and injection pipe to the original state.

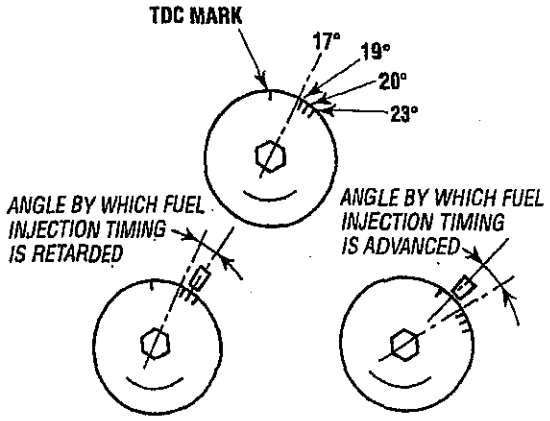

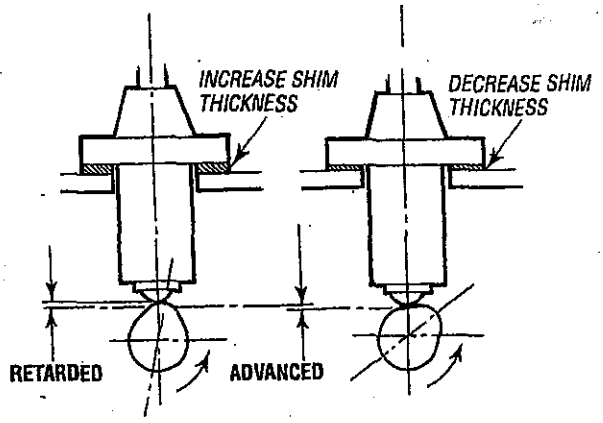

GLOW PLUGS

DESCRIPTION

The glow plugs are wired through the preheat solenoid. When PREHEAT is pressed at the control panel this solenoid should "click" on and the glow plug should begin to get hot.

INSPECTION

To inspect the plug, remove the electrical terminal connections, then unscrew or unclamp each plug from the cylinder head. Thoroughly clean each plug's tip and threads with a soft brush and cleaning solution to remove all the carbon and oil deposits. While cleaning, examine the tip for wear and burn erosion; if it has eroded too much, replace the plug.

TESTING

An accurate way to test glow plugs is with an ohmmeter. Touch one prod to the glow plug's wire connection, and the other to the body of the glow plug, as shown. A good glow plug will have a 0.4 - 0.6 ohm resistance. This method can be used with the plug in or out of the engine. You can also use an ammeter to test the power drain (5 - 6 amps per plug).

> ⚠ **WARNING:** ***These glow plugs will become very hot to the touch. Be careful not to burn your fingers when testing the plugs.***

Re-install the plugs in the engine and test them again. The plugs should get very hot (at the terminal end) within 7 to 15 seconds. If the plugs don't heat up quickly, check for a short circuit. When reinstalling the glow plugs, use anti-seize compound on the threads.

> ⚠ **WARNING:** ***Do not keep a glow plug on for more than 30 seconds.***

Glow Plug Tightening Torque	7 - 11 ft-lb (1.0 - 1.5 m-kg)

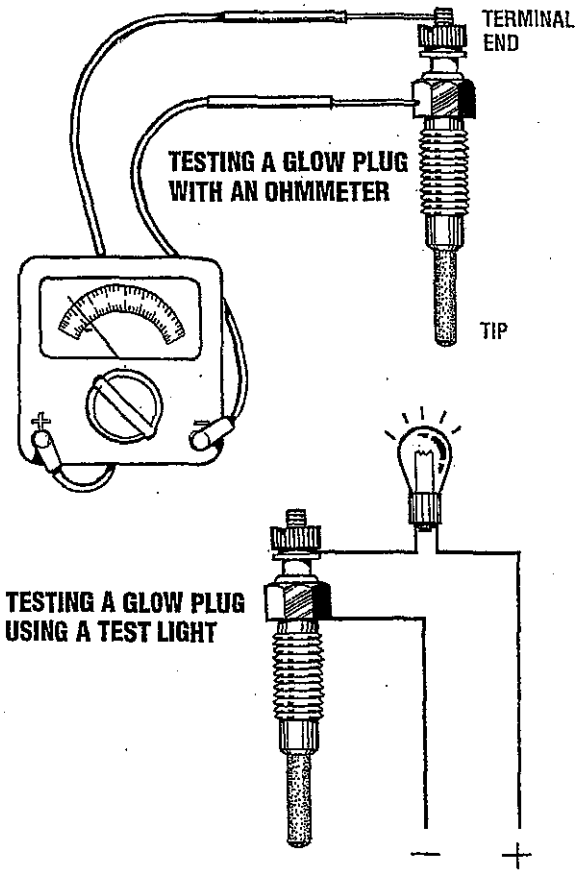

STARTER MOTOR

DESCRIPTION

The starter is a new type, small, light-weight and is called a high-speed internal-reduction starter. The pinion shaft is separate from the motor shaft; the pinion slides only on the pinion shaft. A reduction gear is installed between the motor shaft and a pinion shaft. The pinion sliding part is not exposed outside the starter so that the pinion may slide smoothly without becoming fouled with dust and grease. The motor shaft is supported at both ends on ball bearings. The lever mechanism, switch and overrunning clutch inner circuit are identical to conventional ones.

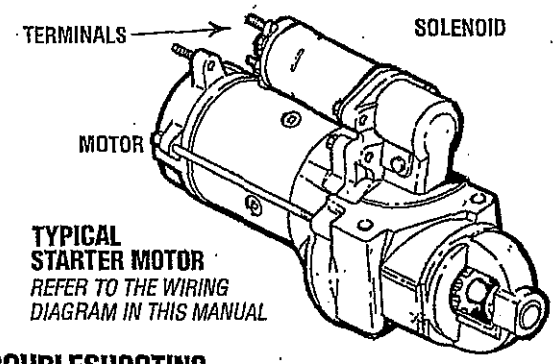

TYPICAL STARTER MOTOR
REFER TO THE WIRING DIAGRAM IN THIS MANUAL

TROUBLESHOOTING

> ⚠ **WARNING:** ***The following emergency starting procedures must not be used with gasoline engines. Sparks could cause an explosion and fire.***

Prior to testing, make certain the ships batteries are at full charge and that the starting system wiring connections (terminals) are clean and tight. Pay particular attention to the ground wire connections on the engine block.

To check the wiring, try cranking the starter for a few seconds, never more than 10 seconds at a time, then run your hand along the wires and terminals looking for warm spots that indicate resistance. Repair or replace any trouble spots.

Using a multimeter, test the voltage between the positive terminal stud on the start solenoid and the engine block (ground).

If you read 12 volts, the starter is faulty.

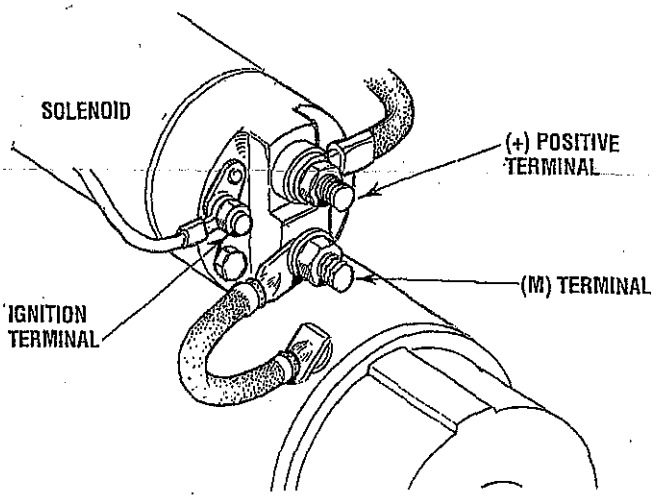

To test the ignition circuit, locate the ignition(s) terminal (it is one of the small terminal studs and is wired to the ignition circuit). Use a screwdriver, don't touch the blade, to jump from that ignition terminal to the positive battery connection terminal on the solenoid.

If the starter cranks, the fault lies with the ignition circuit.

If the solenoid clicks but nothing happens, the starter motor is probably faulty.

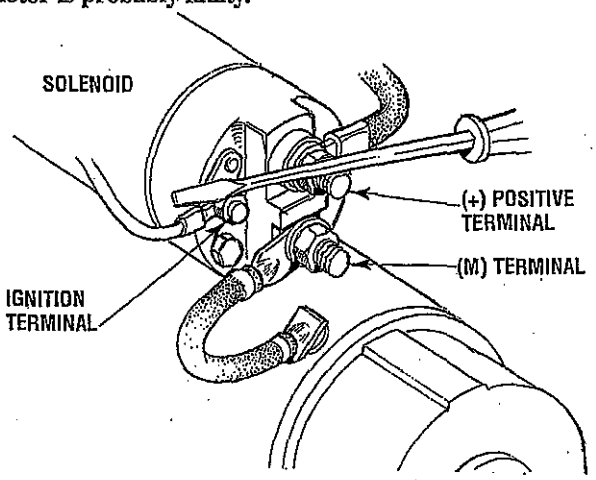

If nothing happens at all, the solenoid is not getting current.. Check the battery isolation switch and inspect the wiring connections. it is also possible that the solenoid is defective.

> ⚠ **WARNING:** ***There will be arching and sparks will fly when jumping terminals. Be certain the engine space is free of potentially explosive fumes, especially gasoline, and that there are NO flammable solvents or materials stored nearby.***

STARTER MOTOR

⚠ WARNING: ***When performing these procedures, position yourself safely away from the moving parts of the engine in case the engine starts-up. Also warn other crew members of the danger.***

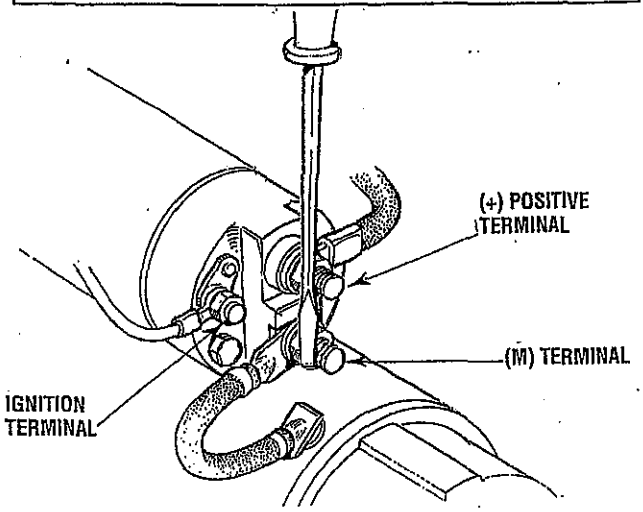

Test again by jumping the two large terminal studs. Hold the screwdriver blade firmly between the studs. Do not allow the screwdriver blade to touch the solenoid or starter casing, this would cause a short.

⚠ WARNING: ***There will be arching as the full starting current should be flowing thru the blade of the screwdriver.***

If the starter spins, the solenoid is faulty.

If the starter fails to spin, the motor is probably faulty.

If no arching occurred, there is no juice reaching the solenoid.

NOTE: *Starter motors are either inertia type or pre-engaged. In the pre-engaged model, the solenoid also moves an arm that engages the starter motor to the flywheel of the engine. using a screwdriver to bypass the solenoid on such a starter will run the motor without engaging the flywheel. Turn the starter switch on to provide power to the solenoid. Hopefully it will create enough magnetic field for the arm to move even though the contacts inside the solenoid are bad.*

EMERGENCY START

Corrosion to the starter brushes and/or the solenoid contacts can cause the sporadic problem of the engine starting one time but not another. If corrosion is the problem, the starter will need to be rebuilt.

It is however, sometimes possible to get started by taping the starter lightly with a small hammer.

With the battery switch off and no ignition,. tap lightly on the starter/solenoid casing as shown, then try to start the engine.

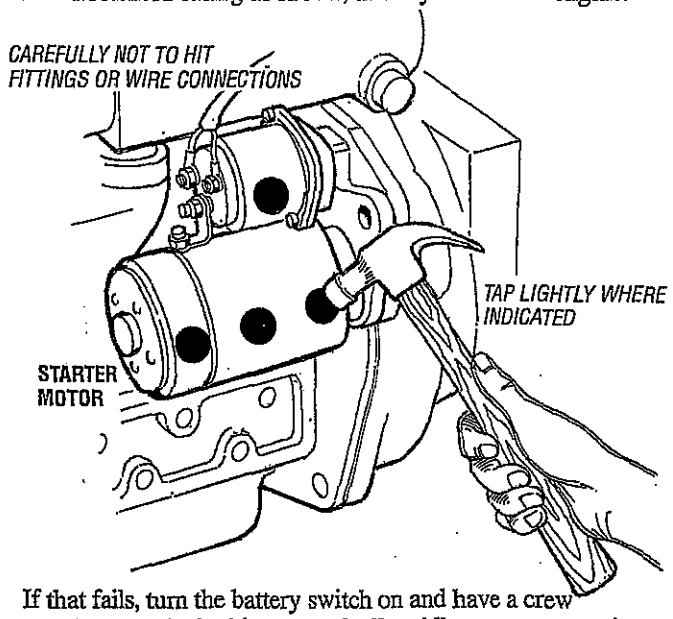

If that fails, turn the battery switch on and have a crew member turn the ignition on and off rapidly as you tap again with the hammer., This may loosen the brushes and allow contact to start the engine. When you reach a repair facility, the starter will need to be repaired.

SERVICE

WESTERBEKE uses a standard starter motor which can be serviced or rebuilt at any starter motor automotive service center,

If replacing the starter motor, make certain the new motor is certified for marine use. Automotive starters do not meet USCG standards. If in doubt, contact your WESTERBEKE dealer.

TO REMOVE FOR SERVICE

1. Disconnect the negative battery cable.
2. If necessary, remove any components to gain full access to the starter motor.
3. Label and disconnect the wiring from the starter. (Do not allow wires to touch, tape over the terminals).
4. Remove the starter mounting bolts.
5. Remove the starter from the engine. In some cases the starter will have to be turned to a different angle to clear obstructions,

ALTERNATORS TESTING/TROUBLESHOOTING

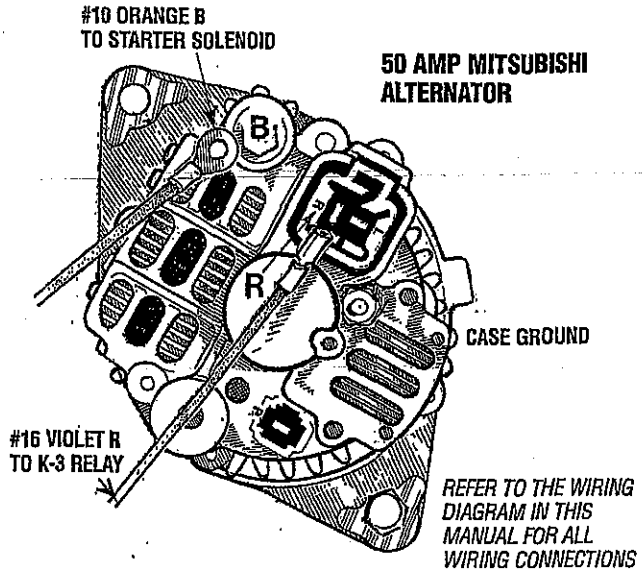

DESCRIPTION

The following information applies to the standard alternators that are supplied with WESTERBEKE'S Engines and Generators.

ELECTRICAL CHARGING CIRCUIT

The charging system consists of an alternator with a voltage regulator, an engine DC wiring harness, a mounted DC circuit breaker and a battery with connecting cables. Because of the use of integrated circuits (IC's), the electronic voltage regulator is very compact and is mounted internally or on the back of the alternator.

It is desirable to test the charging system (alternator and voltage regulator) using the wiring harness and electrical loads that are a permanent part of the system and will then provide the technician with an operational test of the charging system as well as the major components of the electrical system.

ALTERNATOR DESCRIPTION

The stator is connected to a three-phase, full-wave bridge rectifier package which contains six diodes. The bridge converts the AC generated in the stator to a DC output for battery charging and accessories,

Power to the regulator and the field of the integral regulator alternator is provided by the field diode (or diode trio) package contained in the alternator.

These alternators produce a rated output of 50 or 51 amps. rated output is achieved at approximately 6000 alternator rpm at an ambient temperature of 75°F (23.8°C). The alternators are designed to operate in an ambient temperature range of -40° to 212°F (-40° to 100°C).

VOLTAGE REGULATOR

The integral voltage regulator is an electronic switching device which senses the system voltage level and switches the voltage applied to the field in order to maintain a proper system voltage.

The regulator design utilizes all-silicon semi conductors and thick-film assembly techniques. After the voltage has been adjusted to the proper regulating valve, the entire circuit is encapsulated to protect the circuit and the components from possible damage due to handling or vibration.

ALTERNATOR TROUBLESHOOTING

Use this troubleshooting section to determine if a problem exists with the charging circuit or with the alternator. If it is determined that the alternator or voltage regulator is faulty, have a qualified technician check it.

⚠ WARNING: ***A working alternator runs hot. A failed alternator can become very hot. Do not touch the alternator until if has cooled.***

LOW BATTERY/FAULTY CIRCUIT

If the starter only moans or makes a clicking sound instead of spinning the engine to life it is likely a low battery or a faulty connection in the starting circuit and not an alternator problem.

PRELIMINARY INSPECTION

Before starting the actual alternator and voltage regulator, testing the following checks are recommended.

1. Make certain your alternator is securely mounted.
2. Check the drive belts for proper tension. Replace the belt if it is worn or glazed.
3. Check that all terminals, connectors and plugs are clean and tight. Loose or corroded connections cause high resistance and this could cause overcharging, undercharging or damage to the charging system. Badly corroded battery cables could prevent the battery from reaching a fully charged condition.
4. Check the condition of the battery and charge if necessary. A low or discharged battery may cause false or misleading readings in the tests.

NOTE: *An isolator with a diode, a solenoid, or a battery selector switch is usually mounted in the circuit to isolate the batteries so the starting battery is not discharged along with the house batteries. If the isolator is charging the starting battery but not the house battery, the alternator is OK and the problem is in the battery charging circuit.*

ALTERNATORS TESTING/TROUBLESHOOTING

TESTING THE ALTERNATOR

> ⚠ **CAUTION:** ***Before starting the engine make certain that everyone is clear of moving parts! Keep away from sheaves and belts during test procedures.***

1. Start the Engine.
2. After the engine has run for a few minutes, measure the starting battery voltage at the battery terminals using a multimeter set on DC volts.
   a. If the voltage is increasing toward 14 volts, the alternator is working.
   b. If the voltage remains around 12 volts, a problem exists with either the alternator or the charging circuit; continue with Steps 3 through 6.

MEASURING BATTERY VOLTAGE *(ENGINE RUNNING)*

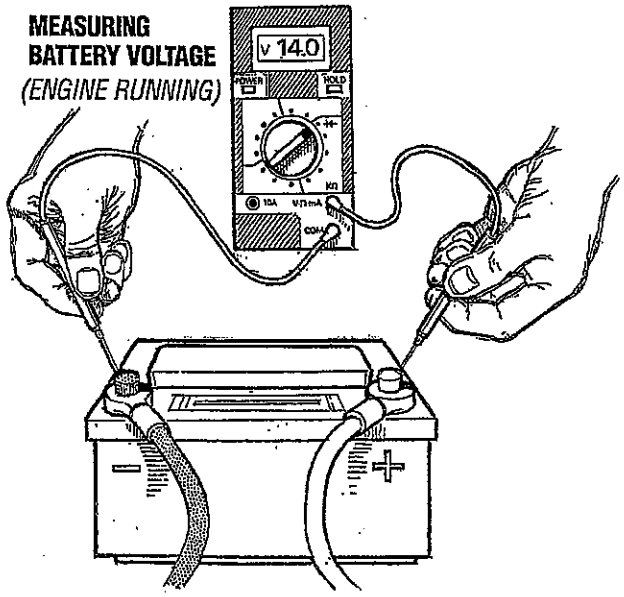

3. **Turn off the engine.** Inspect all wiring and connections. Ensure that the battery terminals and the engine ground connections are tight and clean
4. If a battery selector switch is in the charging circuit,ensure that it is on the correct setting.
5. Check the battery voltage. If your battery is in good condition the reading should be 12 to 13 volts.

MEASURING BATTERY VOLTAGE *ENGINE OFF)*

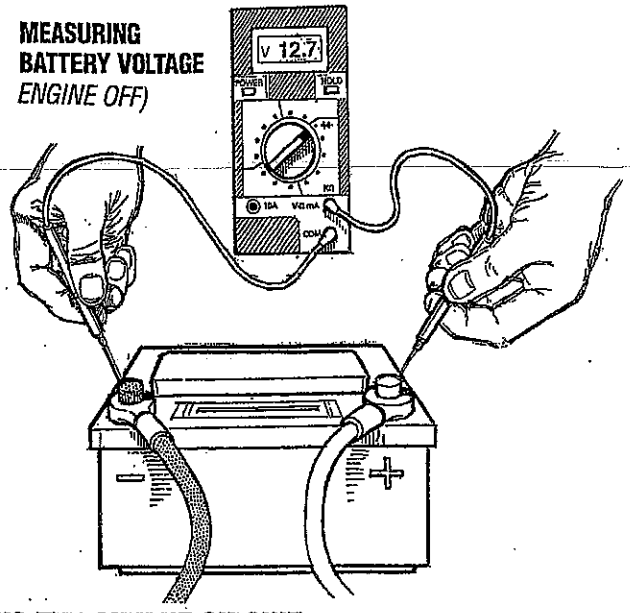

TESTING THE OUTPUT CIRCUIT

1. Connect the positive probe to the output terminal **B** and connect the negative probe to ground.
2. Wiggle the engine wiring harness while observing the voltmeter. The meter should indicate the approximate battery voltage, and should not vary. If no reading is obtained, or if the reading varies, check the alternator output circuit for loose or dirty connections or damaged wiring.
3. **Start the engine.**
4. Repeat the same measurement, the negative probe to ground, the positive probe to **B** with the engine running. The voltage reading should be between 13.5 and 14.5 volts. If your alternator is over or under-charging, have it repaired at a reliable service shop.
5. If the previous test reads only battery voltage at terminal **B**, use the meter to measure the DC excitation terminal. If 12 volts is not present at exciter terminal **R**, inspect the wiring for breaks and poor connections. Jump 12 volts from a 12 volt source (such as the battery) and operate the alternator. If the voltage output is 13-14 volts, . . then the alternator is OK.

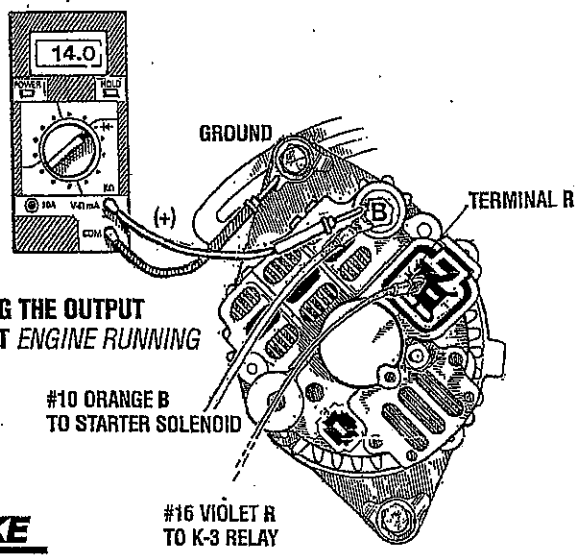

TESTING THE OUTPUT CIRCUIT *ENGINE RUNNING*

ALTERNATORS TESTING/TROUBLESHOOTING

TESTING THE EXCITATION CIRCUIT

1. Connect the positive (+) multimeter probe to the excitation terminal **R** on the alternator and the negative (–) lead to ground.
2. **Turn the battery switch to the on position** and note the multimeter reading. The reading should be 1.3 to 2.5 volts (see illustration).

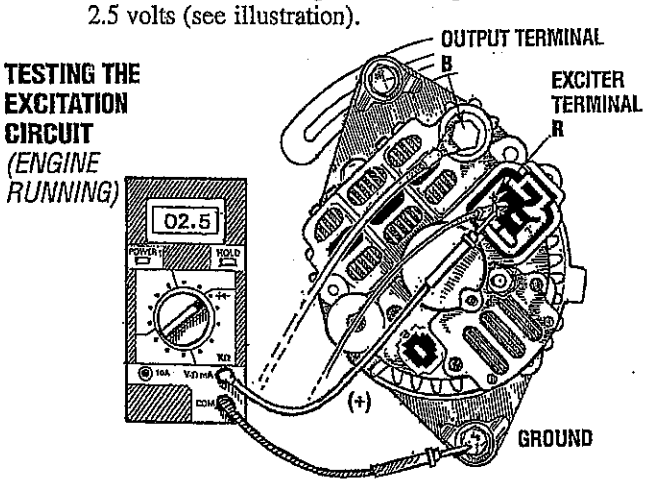

3. **If the reading is between .75 and 1.1 volts,** the rotor field circuit probably is shorted or grounded.
4. **If the reading is between 6.0 and 7.0 volts,** the rotor field circuit probably is open.
5. **If no reading is obtained,** an open exists in the alternator-excitation lead or in the excitation circuit of the regulator. Disconnect the lead from exc terminal **R**. Connect the positive multimeter probe to the excitation lead and the negative multimeter probe to ground. If the multimeter now indicates an approximate battery voltage, the voltage regulator is defective and must be replaced. If no voltage is indicated, check the excitation circuit for loose or dirty connections or damaged wiring.

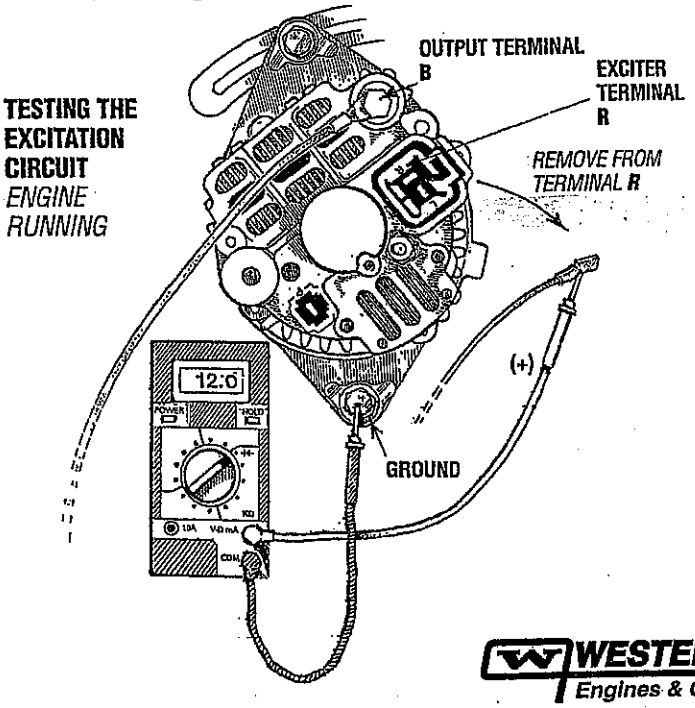

CHECKING THE SERVICE BATTERY

Check the voltage of the service battery. this battery should have a voltage between 13 and 14 volts when the engine is running. If not, there is a problem in the service battery charging circuit. Troubleshoot the service battery charging circuit by checking the wiring and connections, the solenoid, isolator, battery switch, and the battery itself.

When the problem has been solved and before the alternator is back in operation, take the time to tighten and clean the terminal studs. Also clean the connecting terminals from the wiring harness.

ALTERNATOR REPAIR

If tests indicate a failed alternator, it will need to be disassembled and repaired. Any good alternator service shop can do the job.

NOTE: *WESTERBEKE'S Service Manual has detailed instructions for the disassembly and repair of their standard alternators.*

BATTERY CARE

The minimum recommended capacity of the battery used in the engine's 12 volt DC control circuit is 600 – 900 Cold Cranking Amps (CCA).

Review the manufacturer's recommendations and then establish a systematic maintenance schedule for your engine's starting batteries and house batteries.

- Monitor your voltmeter for proper charging during engine operation.
- Check the electrolyte level and specific gravity with a hydrometer.
- Use only distilled water to bring electrolytes to a proper level.
- Make certain that battery cable connections are clean and tight to the battery posts (and to your engine).

WIRING DIAGRAM #54193
(10-15KW EDT THREE PHASE)

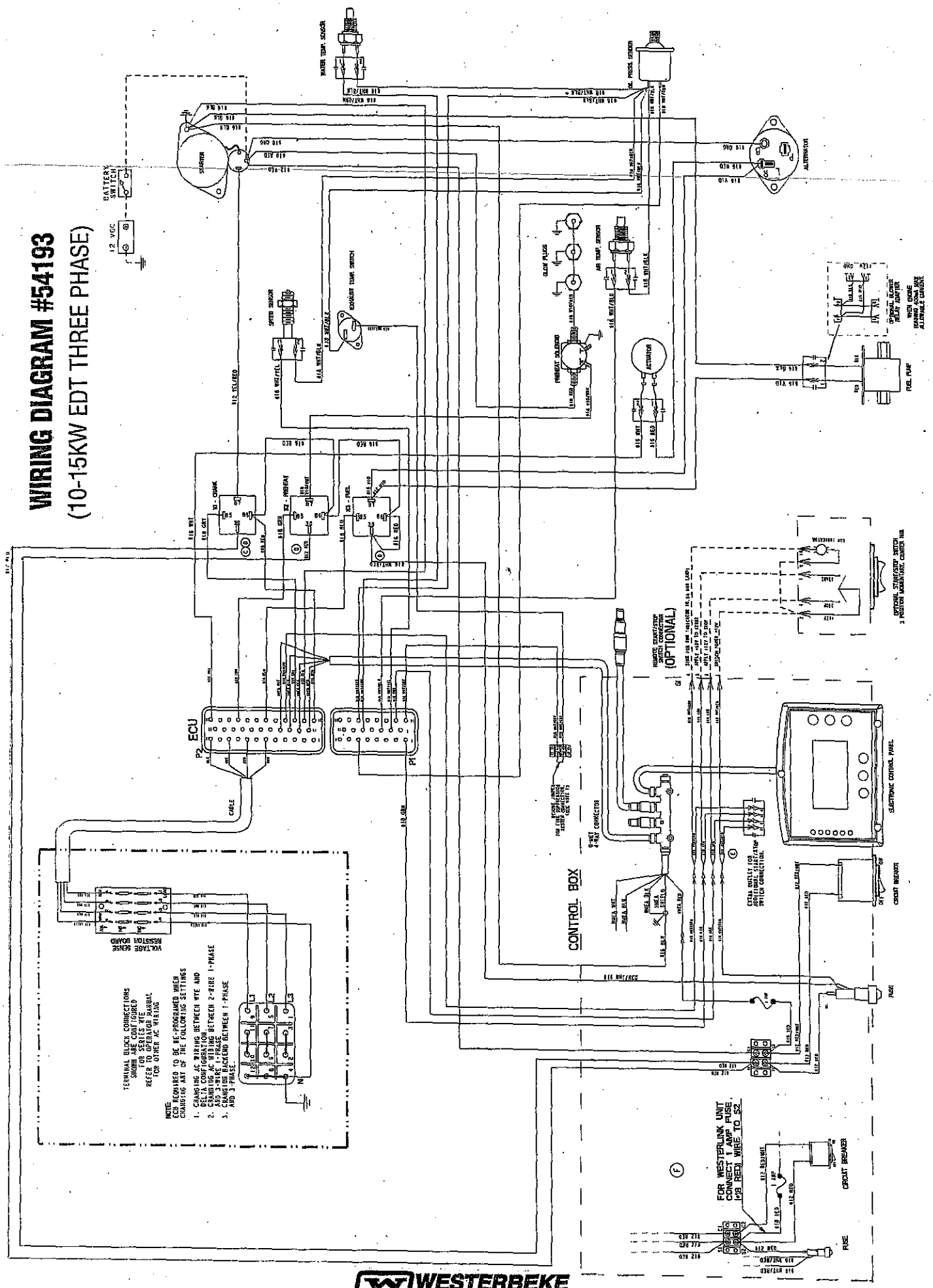

NOTE:
1. FIRE SUPPRESSION SYSTEM CONNECTION IS NOT A FUSE, THIS CIRCUIT MUST BE CLOSED TO RUN, OPEN TO STOP GENSET.

WESTERBEKE
Engines & Generators

WIRING DIAGRAM #54655

(10 -15KW EDT THREE PHASE 24V)

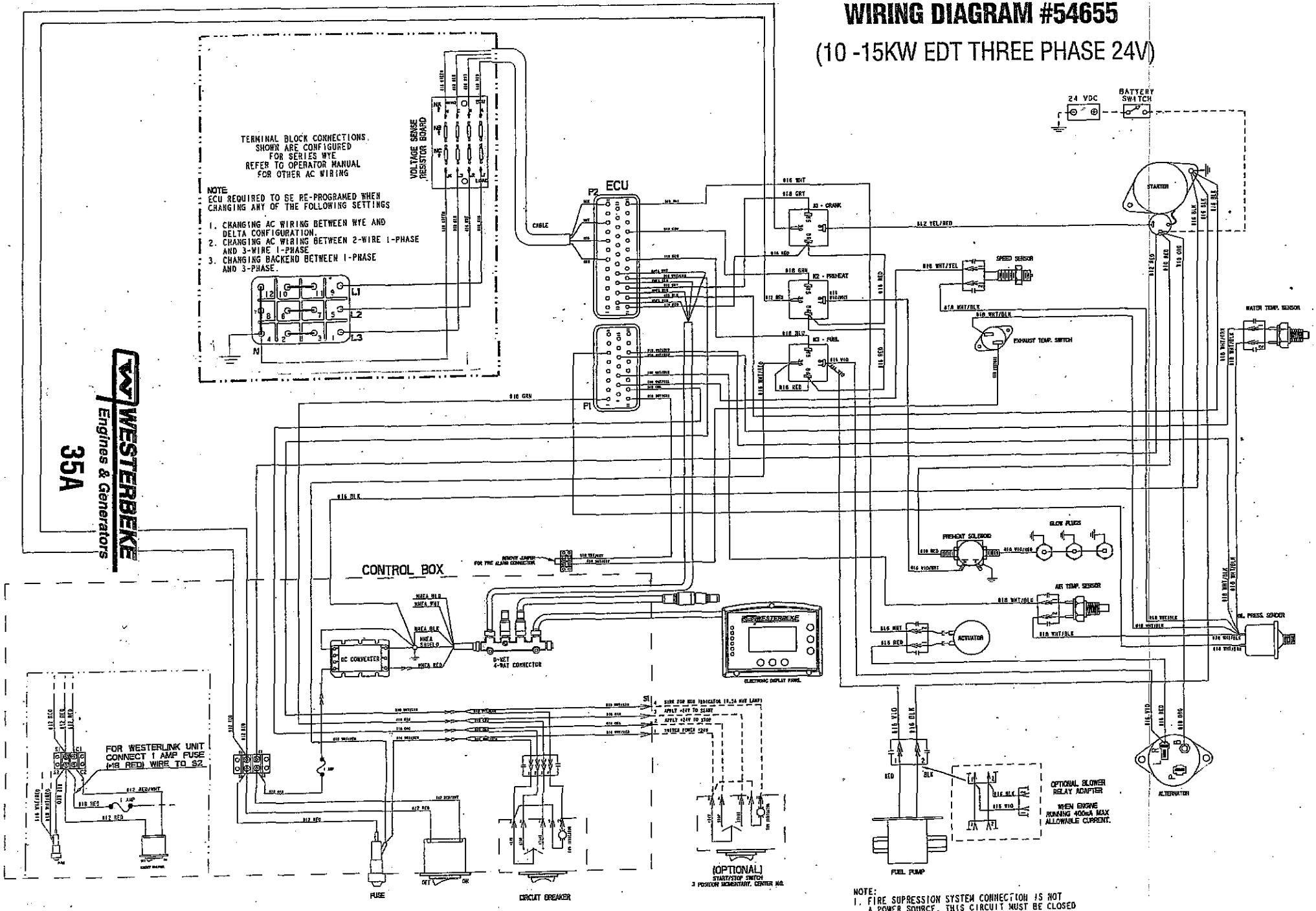

WIRING DIAGRAM #53477
(5.5KW EDC/7.6-15 EDT 24V)

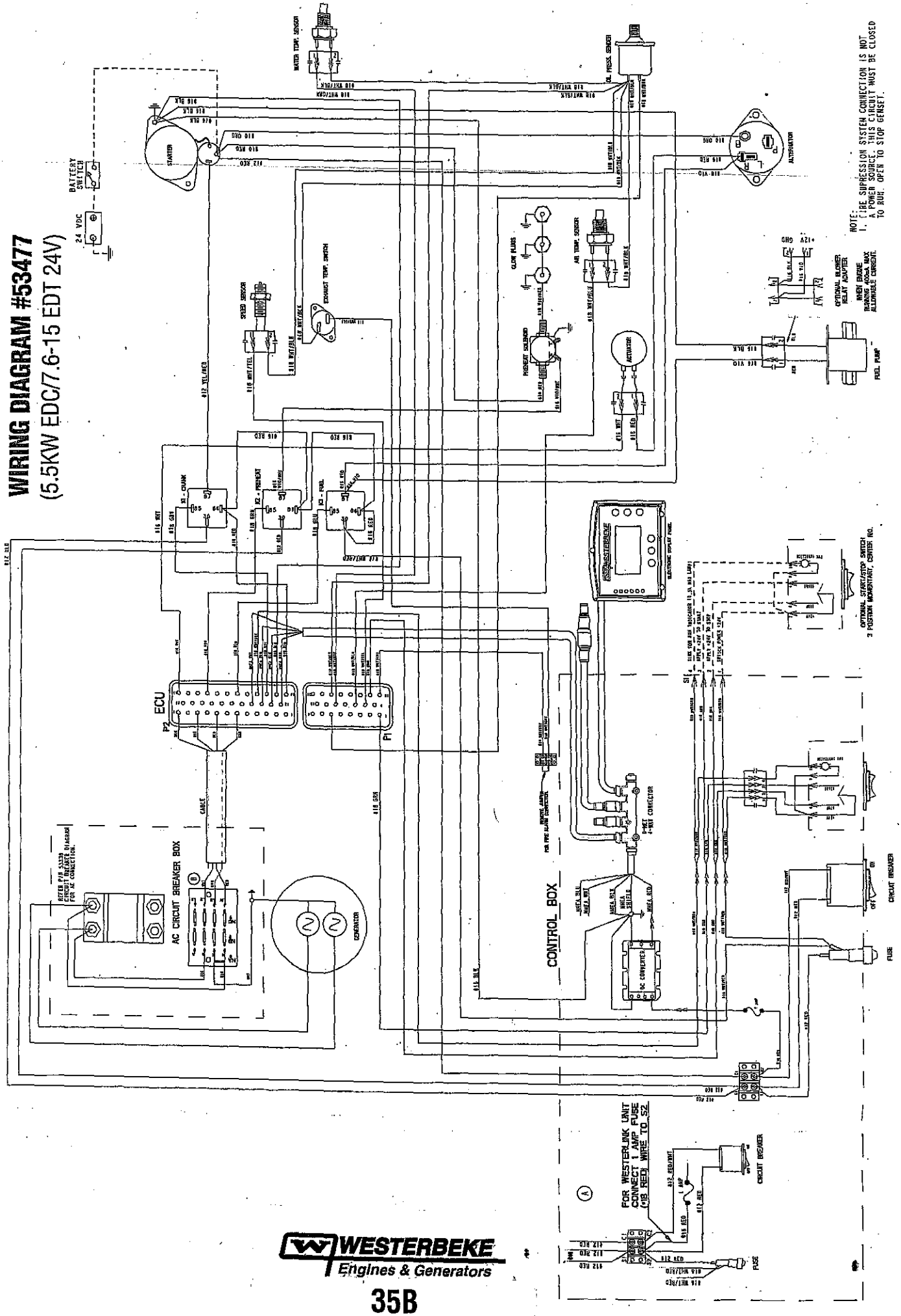

WIRING DIAGRAM #54628 (5.5 EDC/7.6 - 15KW EDT) 12VDC Ungrounded

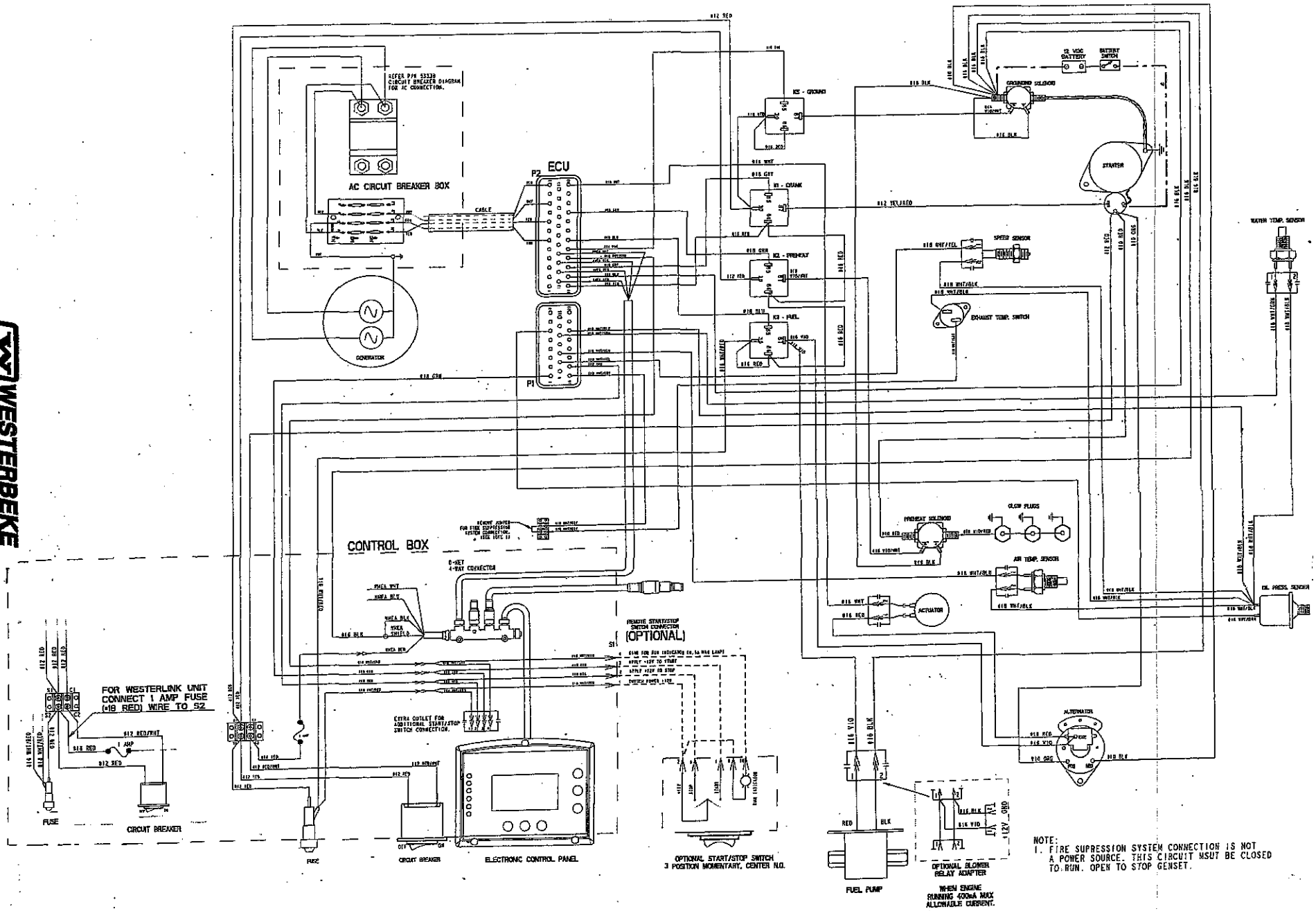

WIRING DIAGRAM #54680 (5.5 EDC/7.6 - 15KW EDT 24V) Ungrounded

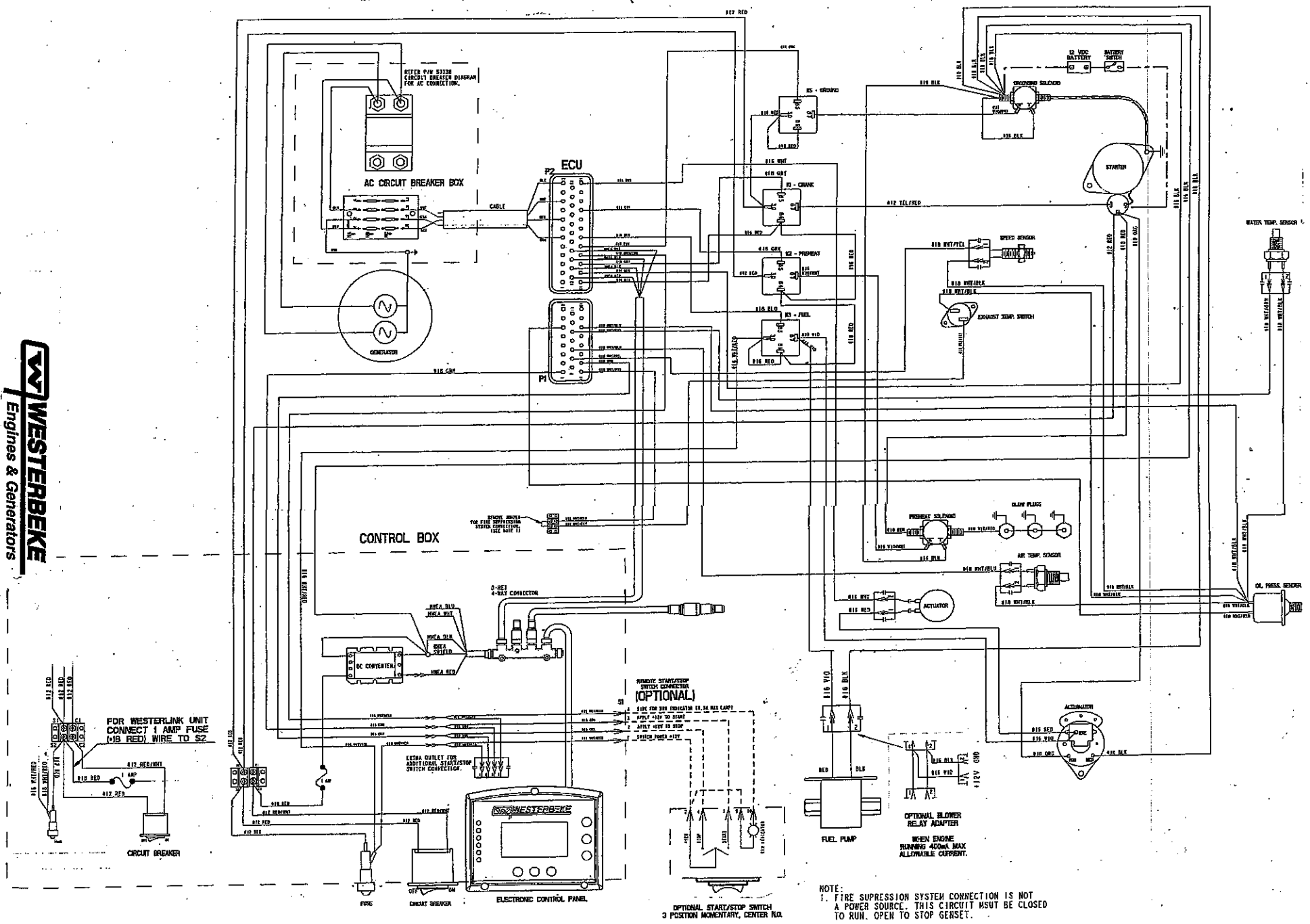

NOTE:
1. FIRE SUPRESSION SYSTEM CONNECTION IS NOT A POWER SOURCE. THIS CIRCUIT MSUT BE CLOSED TO RUN. OPEN TO STOP GENSET.

WIRING DIAGRAM #52793
(5.5 EDC/7.6 - 15KW EDT)
12VDC

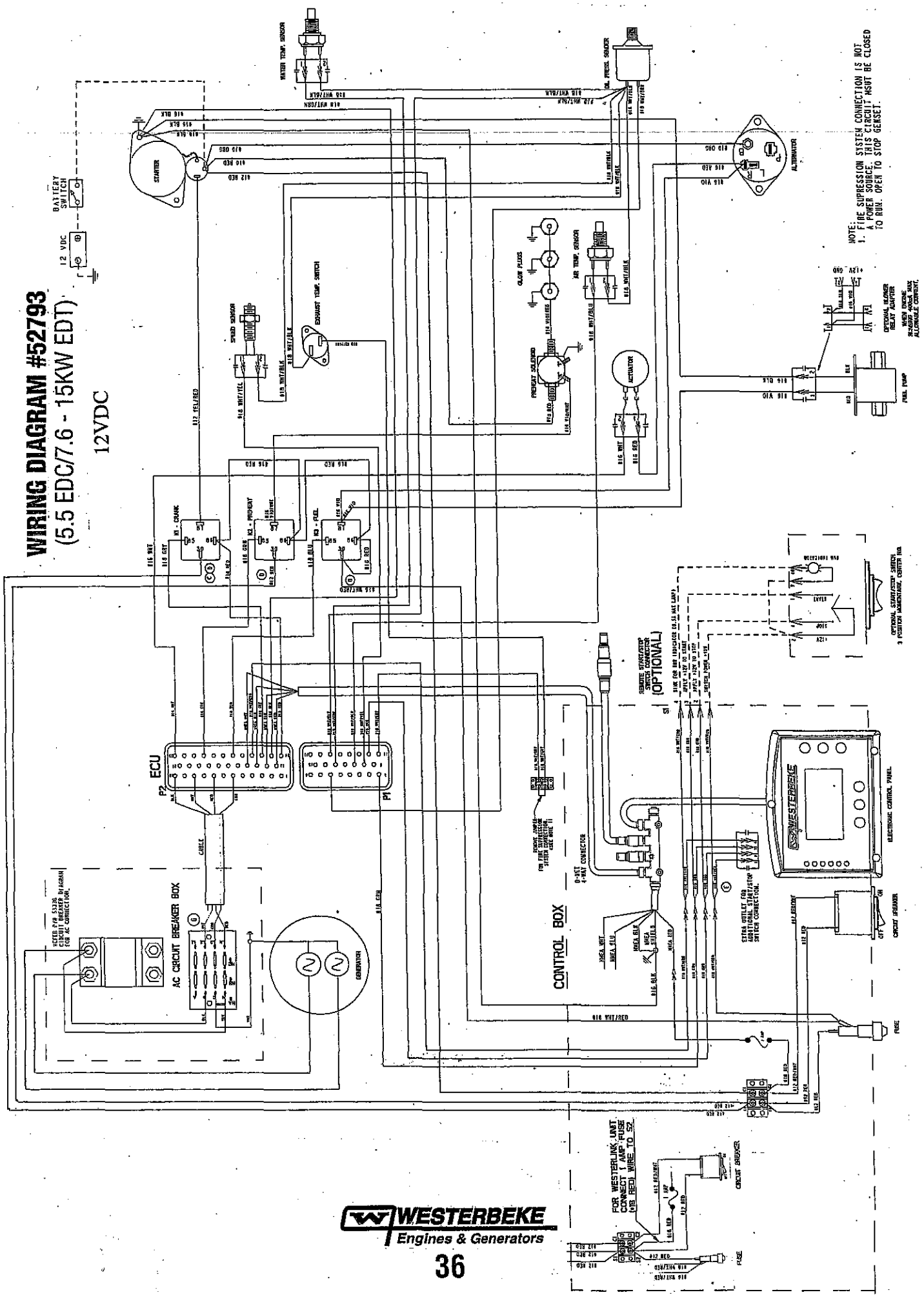

GENERATOR INFORMATION

USE OF ELECTRIC MOTORS

The power required to start an electric motor is considerably more than is required to keep it running after it is started. Some motors require much more current to start them than others. Split-phase (AC) motors require more current to start, under similar circumstances, than other types. They are commonly used on easy-starting loads, such as washing machines, or where loads are applied after the motor is started, such as small power tools. Because they require 5 to 7 times as much current to start as to run, their use should be avoided, whenever possible, if the electric motor is to be driven by a small generator. Capacitor and repulsion-induction motors require from 2 to 4 times as much current to start as to run. The current required to start any motor varies with the load connected to it. An electric motor connected to an air compressor, for example, will require more current than a motor to which no load is connected.

In general, the current required to start 115-Volt motors connected to medium starting loads will be approximately as follows:

MOTOR SIZE (HP)	AMPS FOR RUNNING (AMPERES)	AMPS FOR STARTING (AMPERES)
1/6	3.2	6.4 to 22.4*
1/4	4.6	9.2 to 32.2*
1/3	5.2	10.4 to 72.8*
1/2	7.2	14.4 to 29.2*
3/4	10.2	20.4 to 40.8*
1	13	26 to 52

***NOTE:** *In the above table the maximum* Amps for Starting *is more for some small motors than for larger ones. The reason for this is that the hardest starting types (split-phase) are not made in larger sizes.*

Because the heavy surge of current needed for starting motors is required for only an instant, the generator will not be damaged if it can bring the motor up to speed in a few seconds. If difficulty is experienced in starting motors, turn off all other electrical loads and, if possible, reduce the load on the electric motor.

REQUIRED OPERATING SPEED

Run the generator first with no load applied, then at half the generator's capacity, and finally loaded to its full capacity as indicted on the generator's data plate. The output voltage should be checked periodically to ensure proper operation of the generating plant and the appliances it supplies. If an AC voltmeter or ampmeter is not installed to monitor voltage and load, check it with a portable meter and amprobe.

NOTE: *When the vessel in which the generator is installed contains AC equipment of 120 volts only, it is recommended that the generator's AC terminal block be configured to provide one 120 volt AC hot leg for the vessel's distribution panel. This will ensure good motor starting response from the generator.*

GENERATOR FREQUENCY ADJUSTMENT

Frequency is a direct result of engine/generator speed, as indicated by the following:

- When the generator is run at 1800 rpm, the AC voltage output frequency is 60 Hertz.
- When the generator is run at 1500 rpm, the AC voltage output frequency is 50 Hertz.

Therefore, to change the generator's frequency/voltage, the generator's drive engine's speed must be changed using the dipswitch on the ECU. The AC output configuration of the generator changed and the connections on the voltage sensing PC board changed.

GENERATOR MAINTENANCE

- Maintaining reasonable cleanliness is important. Connections of terminal boards and rectifiers may become corroded, and insulation surfaces may start conducting if salts, dust, engine exhaust, carbon, etc. are allowed to build up. Clogged ventilation openings may cause excessive heating and reduced life of windings.
- For unusually severe conditions, thin rust-inhibiting petroleum-base coatings should be sprayed or brushed over all surfaces to reduce rusting and corrosion.
- In addition to periodic cleaning, the generator should be inspected for tightness of all connections, evidence of overheated terminals and loose or damaged wires.
- The drive discs on single bearing generators should be checked periodically if possible for tightness of screws and for any evidence of incipient cracking failure. Discs should not be allowed to become rusty because rust may accelerate cracking. The bolts which fasten the drive disc to the generator shaft must be hardened steel SAE grade 8, identified by 6 radial marks, one at each of the 6 corners of the head.
- The rear armature bearing is lubricated and sealed; no maintenance is required. However, if the bearing becomes noisy or rough-sounding, have it replaced.
- Examine bearing at periodic intervals. No side movement of shaft should be detected when force is applied. If side motion is detectable, inspect the bearing and shaft for wear. Repair must be made quickly or major components will rub and cause major damage to generator.

Carbon Monoxide Detector

WESTERBEKE recommends mounting a carbon monoxide detector in the vessels living quarters. **Carbon monoxide, even in small amounts, is deadly.**

The presence of carbon monoxide indicates an exhaust leak from the engine or generator or from the exhaust elbow/exhaust hose, or that fumes from a nearby vessel are entering your boat.

If carbon monoxide is present, ventilate the area with clean air and correct the problem immediately!

BT GENERATOR

This generator is a four-pole, brushless, self-excited generator which requires only the driving force of the engine to produce AC output. The copper and laminated iron in the exciter stator are responsible for the self-exciting feature of this generator. The magnetic field produced causes an AC voltage to be induced into the related exciter rotor windings during rotation. Diodes located in the exciter rotor rectify this voltage to DC and supply it to the windings of the rotating field. This creates an electromagnetic field which rotates through the windings of the main stator, inducing an AC voltage which is supplied to a load. A step down transformer is connected in parallel to the AC output of the main stator. An AC voltage is produced in the auxiliary windings of the transformer and the main stator and is, in turn, supplied to a full-wave bridge rectifier. The rectifier produces a DC voltage to further excite the exciter stator windings, enabling the generator to produce a rated AC output. An optional solid-state voltage regulator is available to work in tandem with the transformer regulator to produce a more stable AC output.

A circuit breaker is installed on all WESTERBEKE generators. This circuit breaker will automatically disconnect generator power in case of an electrical overload. The circuit breaker can be manually shut off when servicing the generator to ensure no power is coming into the boat.

NOTE: *This circuit breaker is available as a WESTERBEKE add-on kit for earlier model generations; contact your WESTERBEKE dealer.*

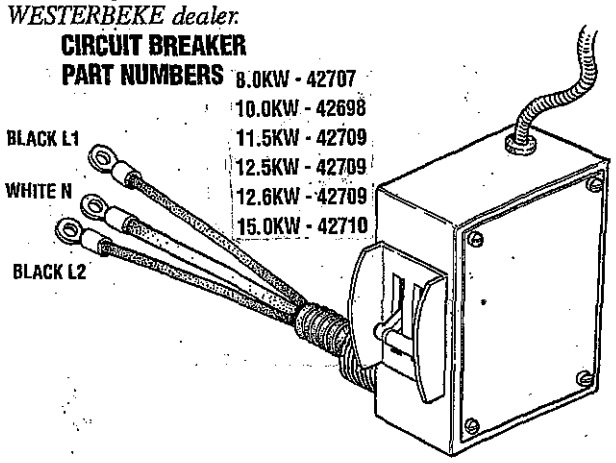

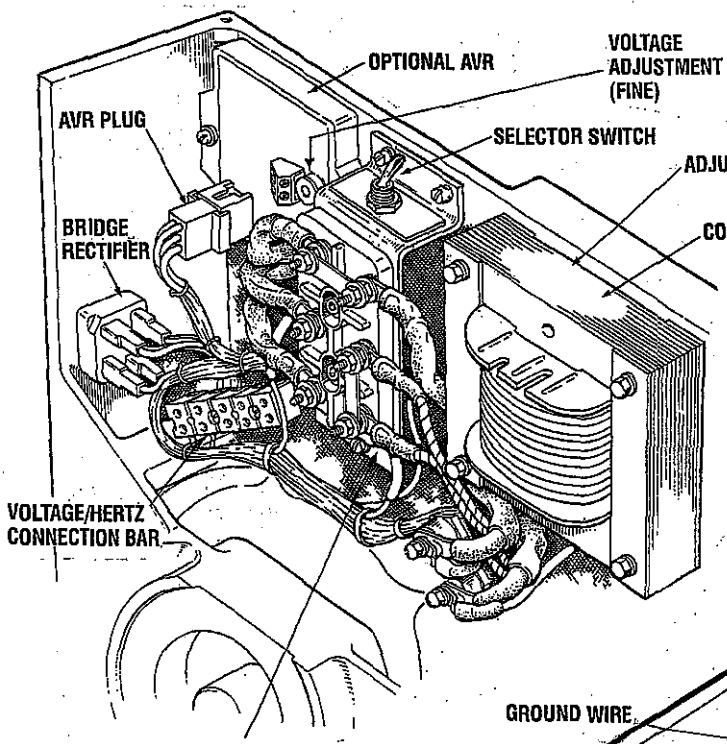

BT GENERATOR SINGLE PHASE [6 STUD]

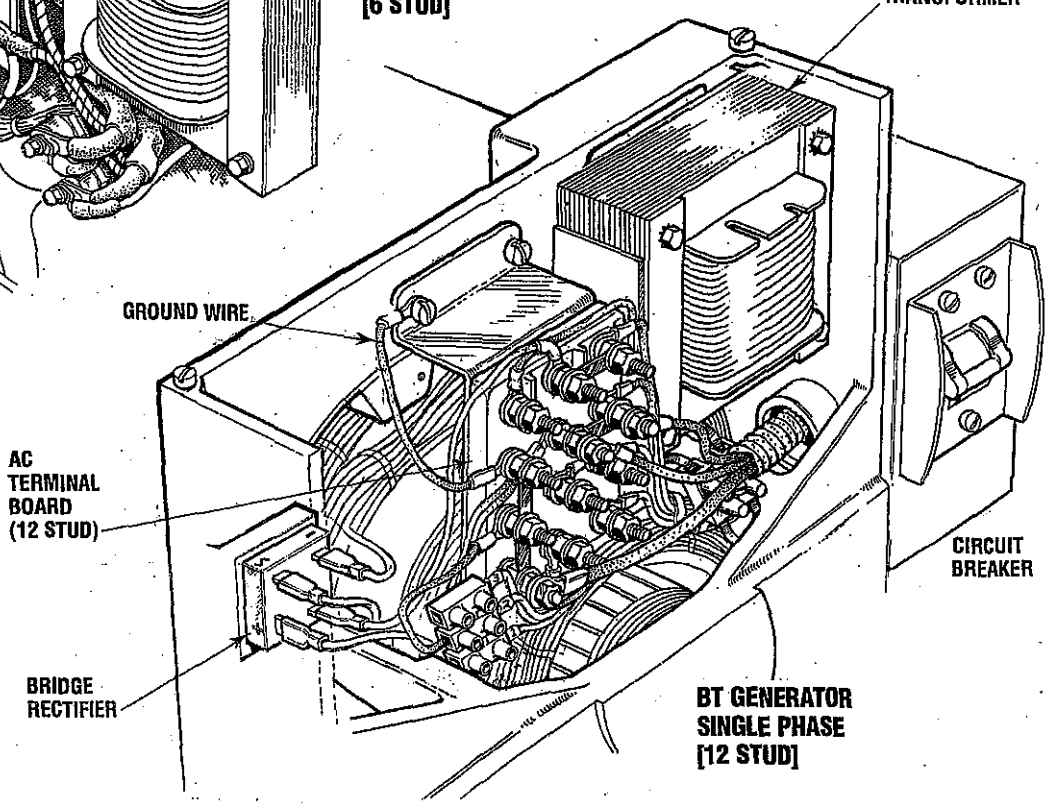

BT GENERATOR SINGLE PHASE [12 STUD]

BT GENERATOR / SINGLE PHASE [SIX STUD]

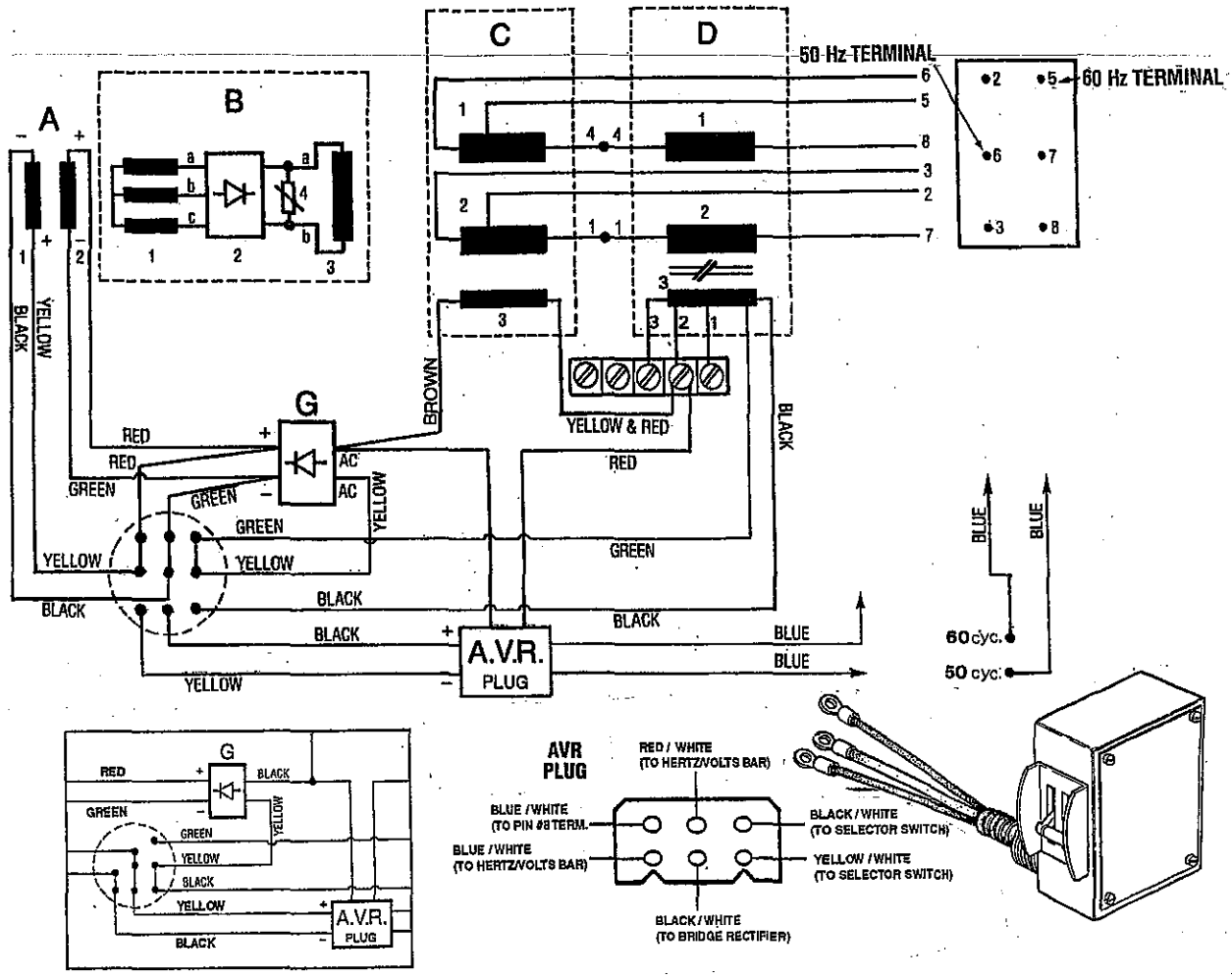

INTERNAL WIRING SCHEMATIC (SIX STUD)
W/OPTIONAL VOLTAGE REGULATOR

A. EXCITER STATOR WINDINGS 1& 2
A - 1 and A - 2 Exciter Stator Windings
(Selector in **COMP** position)

B. EXCITER ROTOR and FIELD
1. Auxiliary Windings (A - B - C)
2. Diodes (6)
3. Rotating Field Windings
4. Suppressor

C. MAIN STATOR
1. Main Stator Windings
2. Main Stator Windings
3. Main Stator Auxiliary Windings

D. COMPOUND TRANSFORMER
1. Compound Transformer Windings
2. Compound Transformer Windings
3. Compound Transformer Auxiliary Windings

Resistance readings and voltage checks can be accessed easily for the components in the exciter circuit A, G, C-3 and D-3 by locating the color coded wires at the connection points shown on the above schematic. When checking winding resistance values be sure to lift both of the component's electrical connections.

G. BRIDGE RECTIFIER

A.V.R.
Optional Automatic Voltage Regulator Plug (6 Prong).

REFER TO THE FOLLOWING PAGE FOR
AC TERMINAL BLOCK CONNECTIONS

GENERATOR VOLTAGE ADJUSTMENT

NOTE: *WESTERBEKE recommends that the following generator adjustments be performed by a quailified technician.*

Generator Frequency

1. Frequency is a direct result of engine/generator speed:
   1800 rpm = 60 hertz
   1500 rmp = 50 hertz
2. To change generator frequency, follow the steps below:
   a. Reconfigure the AC output connections on the six stud terminal block following the illustrations below. Install the correctly rated AC breaker for the Hertz selected.
   b. Properly connect the leads from the voltage sensing board to the line connections on the AC breaker and the neutral/ground to the brass neutral/ground stud in the breaker box. When only one line is present, tie off the unused line sense connection.
   c. **NOTE:** On six stud AC models only, when an optional AVR is installed, reposition the blue/white lead to correspond to the hertz selected on the voltage/hertz connection bar.
   d. Shut off the 20 amp DC panel breaker and move the #1 dipswitch on the ECU to the proper position for the hertz selected - ON for 50 hertz, OFF for 60 hertz. Then turn the DC breaker back on.
   e. Shut off the AC breaker and start the unit. Monitor the no-load AC voltage. If a voltage adjystment is needed, add or remove shim material from under the laminated steel bar of the compound transformer.

60 hertz	No-Load Voltage	121-124 volts
50 hertz	No-Load Voltage	232-235 volts

   f. Close the AC breaker and load the generator and monitor operation.

SIX STUD AC VOLTAGE CONFIGURATIONS

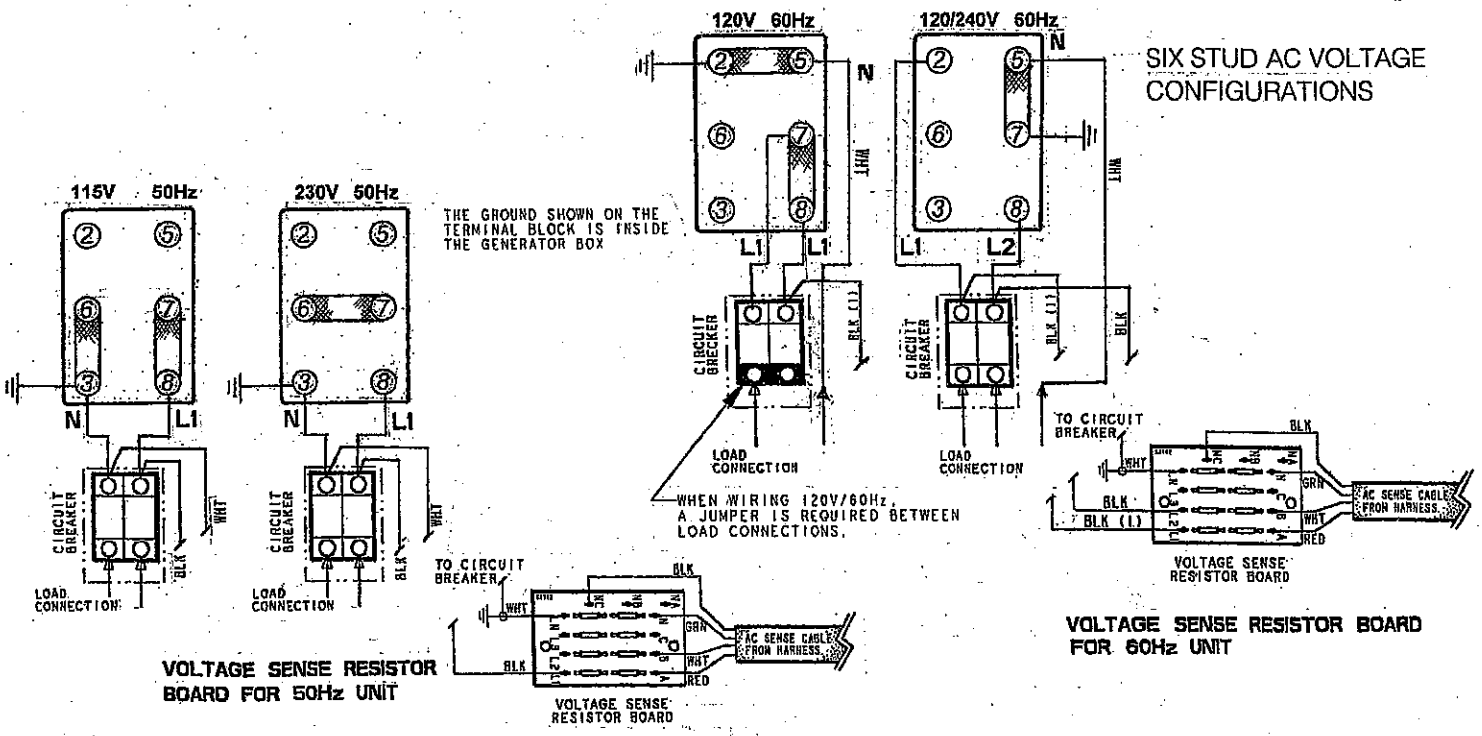

GENERATOR VOLTAGE ADJUSTMENT

NOTE: *WESTERBEKE recommends that the following generator adjustments be performed by a quailified technician.*

Generator Frequency

1. Frequency is a direct result of engine/generator speed:
   1800 rpm = 60 hertz
   1500 rmp = 50 hertz
2. To change generator frequency, follow the steps below:
   a. Reconfigure the AC output connections on the twelve stud terminal block following the illustrations below. Install the correctly rated AC breaker for the Hertz selected.
   b. Properly connect the leads from the voltage sensing board to the line connections on the AC breaker and the neutral/ground to the brass neutral/ground stud in the breaker box. When only one line is present, tie off the unused line sense connection.
   c. Shut off the 20 amp DC panel breaker and move the #1 dipswitch on the ECU to the proper position for the hertz selected - ON for 50 hertz, OFF for 60 hertz. Then turn the DC breaker back on.
   d. Shut off the AC breaker and start the unit. Monitor the no-load AC voltage. If a voltage adjystment is needed, add or remove shim material from under the laminated steel bar of the compound transformer.

60 hertz	No-Load Voltage	121-124 volts
50 hertz	No-Load Voltage	232-235 volts

   e. Close the AC breaker and load the generator and monitor operation.

TWELVE STUD AC VOLTAGE CONFIGURATIONS

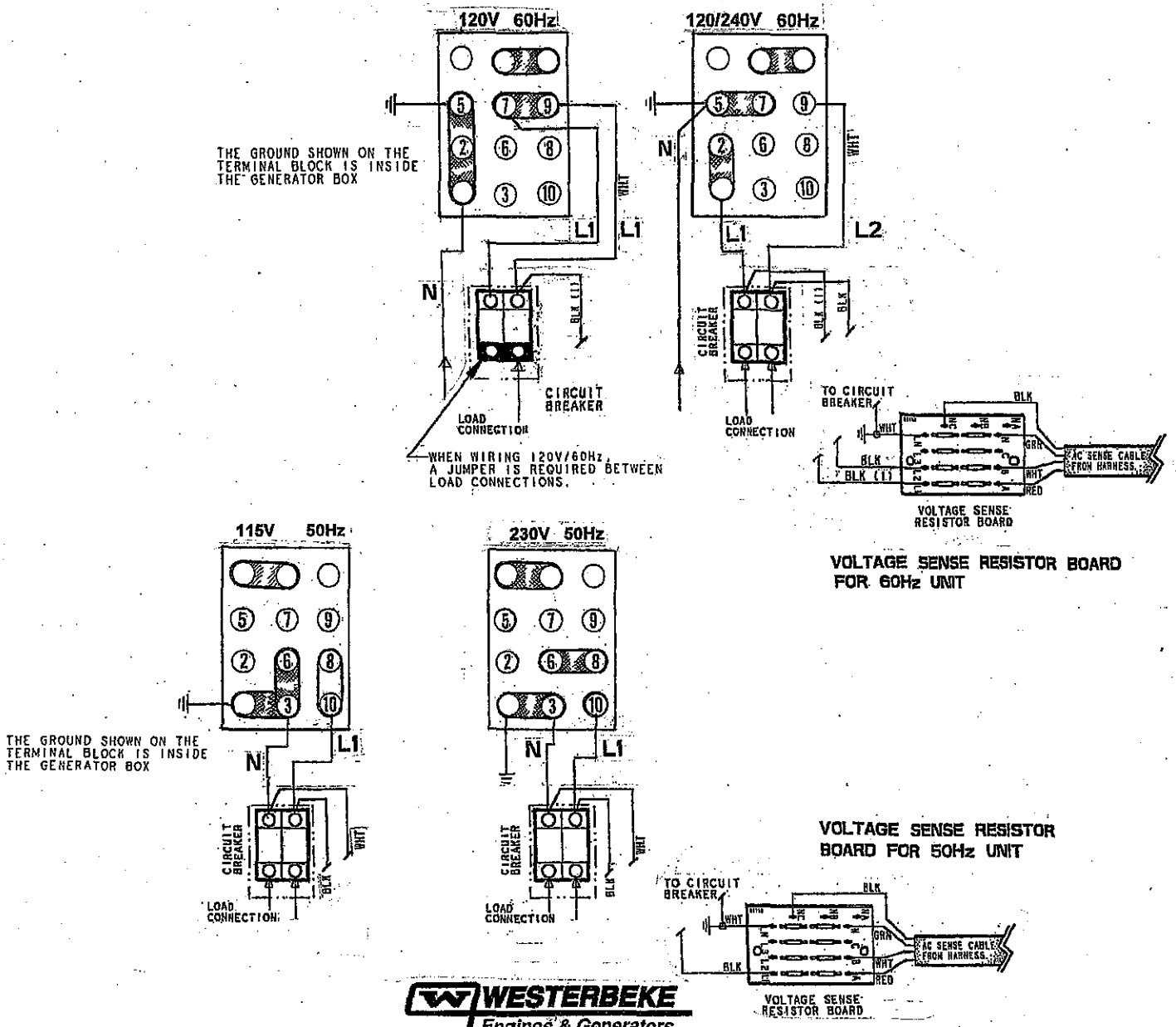

GENERATOR VOLTAGE ADJUSTMENT

NOTE: *WESTERBEKE recommends that the following generator tests and adjustments be performed by a quailified technician.*

NO-LOAD VOLTAGE ADJUSTMENT

Voltage adjustment is made with the generator regulation being governed by the compound transformer.

1. The selector switch, if installed, *must* be in the COMP position.
2. To confirm no-load voltage, start the generator and apply a momentary (moderate) load to excite the transformer. The voltage produced by the generator after the momentary load is removed is no-load voltage. Note the voltage output from the generators 120 volt leg(s) (230 volt 50 hertz). The no-load voltage should be between 121 - 124 volts at 60.0 - 60.5 hertz (232 - 236 volts at 50.0 - 50.5 hertz).

NOTE: *The no-load voltage should be adjusted to the voltage produced by the generator once started and a momentary load should be applied to excite the transformer and then removed. The voltage produced by the generator after this momentary load is removed is no-load voltage.*

3. To raise or lower the voltage, shims of varying thickness (non-conductive material) are placed or removed from under the steel laminated bar on top of the compound transformer. The material used for shimming should not soften at temperatures in the 176° F (80° C) range. A small reduction in no-load voltage (1 to 3 volts) can some times be accomplished by gently tapping the top of the laminated steel bar to reduce the gap between the existing shims and the transformer core.

NOTE: *No-load voltage may be effected needing readjustment with the compound transformer. Do not use these adjustments to compensate for overload conditions being placed on the generator/engine (inductive-motor type loads). Loss of generator hertz/speed, the result of overload, will cause a drop in voltage output.*

Shim thickness of 0.001 inch will change the no-load voltage by approximately 4 - 6 volts. Adding shim material raises the no-load voltage. Removing shim material lowers no-load voltage.

FULL-LOAD VOLTAGE ADJUSTMENT

The voltage hertz connection bar that is used when changing from 60Hz to 50Hz can also be used to increase or decrease the generators full-load output.

Fine voltage adjustments can be performed by repositioning wires **A** to leads #1, #2, and #3 increasing the loaded voltage progressively in that order. A no-load voltage adjustment will have to be made as well.

Should full-load output fall below 108 volts-60Hz (210 volts-50Hz), the voltage should be adjusted.

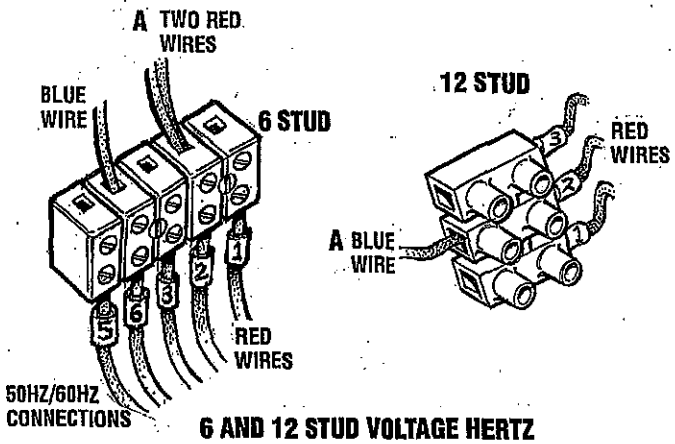

6 AND 12 STUD VOLTAGE HERTZ CONNECTION BARS

NOTE: *When the optional voltage regulator is installed and if the Blue/White (Blue) lead is not correctly positioned to correspond to the Hertz the unit is operating at, the regulator will sense incorrect voltage and cause the generator to produce abnormally high output voltage.*

OPTIONAL AUTOMATIC VOLTAGE REGULATOR (AVR)

An optional solid-state voltage regulator (board #34410) is available for use with the BT series generators. When installed, and the regulation switch is moved to the ELEC position, the regulator works together with the standard compound transformer regulator to regulate the generator's voltage output. In the ELEC mode, the regulator provides excitation to the group1 exciter windings, and the transformer provides excitation to the group 2 exciter windings.

Installation

1. The regulator is mounted using existing tapped holes in the generator's case. Use two (2) M4 x 0.7mm screws, each 15mm long, with lock washers to mount the regulator board.
2. Connect the 6-prong generator plug to the receptacle on the regulator board.

NOTE: *The plug is keyed to engage the regulator receptacle in one direction. Check this and insert it correctly.*

3. Before moving the selector switch to the ELEC position, the NO-Load voltage produced by the generator when in the COMP position will have to be adjusted. The NO-load voltage should be adjusted down between 114 - 118 volts (60Hz) or 224 - 228 volts (50Hz) following the procedures as explained earlier in this manual.
4. With the generators no load voltage properly adjusted, move the selector switch into the ELEC position. Adjust the regulator board potentiometer to set NO-load voltage to 120 - 122 volts at 60-60.5 hertz (230-234 volts at 50-50.5 hertz). The regulator board is operating in parallel with the compound transformer and should maintain voltage output within + or -5% from No-load to Full-load.

NOTE: *Do not use the regulator to force NO-Load voltage down. Use the compound transformer for this function. Using the regulator to perform this causes the regulator to use more exciter circuit power. This leaves less exciter circuit power for loaded conditions.*

NOTE: *Ship to shore switches are available at your WESTERBEKE dealer.*

> ⚠ **CAUTION:** ***Heavy motor leads should be shut off before switching shore power to generator power or vice-versa because voltage surges induced by switching with heavy AC loads on the vessel being operated may cause danage to the exciter circuit components in the generator.***

Shore Power Connections (60 Hertz)

If the installer connects shore power to the vessel's AC circuit, this must be done by means of the Shore Power Transfer Switch. Set the transfer switch shown in the diagrams to the OFF position. This switch prevents simultaneous connection of shore power to generator output.

> ⚠ **CAUTION:** ***Damage to the generator can result if utility shore power and generator output are connected at the same time. This type of generator damage is not covered under the warranty; it is the installer's responsibility to make sure all AC connections are correct.***

120 Volt/60 Hertz Three Wire Configuration

Note the repositioning of the white ground lead on the terminal block to the generator case.

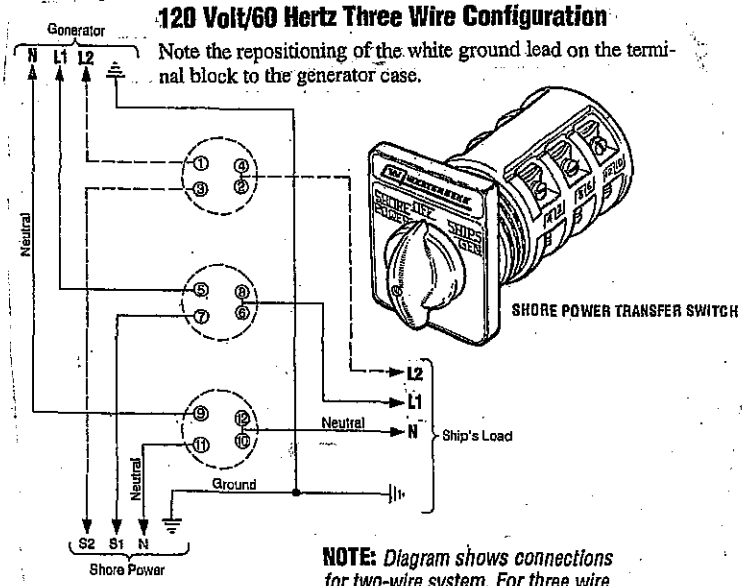

NOTE: *Diagram shows connections for two-wire system. For three wire system, use the dotted line for the other hot leg.*

230 Volt/50 Hertz Two Wire Configuration

Notice the repositioning of the white ground lead on the terminal block to the generator case.

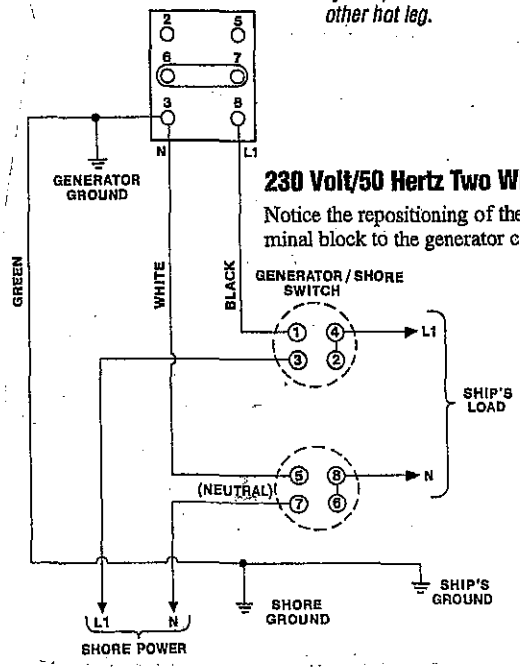

BT GENERATOR VOLTAGE REGULATOR ADJUSTMENTS [THREE PHASE]

Description

The voltage regulator is an advanced design which ensures optimum AC generator performance. It is equipped with complete protection circuitry to guard against operating conditions that could be detrimental to the AC generator.

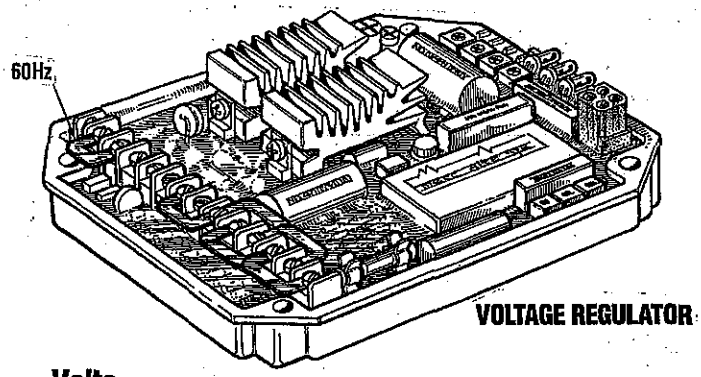

Volts

This potentiometer is used to adjust output voltage. At proper engine operating speed the output voltage should be held at ±1% from a no-load condition to a full rated generator output and from power factor 1.0 - 0.8 with engine drive speed variations up to -6%. Prior to starting the engine, turn the VOLT and STAB trimmers (using a mini phillips screwdriver) fully in a counter clockwise (Minimum) direction until you feel them hit their stops. Turn the AMP and HERTZ trimmers completely clockwise (Maximum) in the same manner. With the generator running at no-load, at normal speed, and with VOLT adjust at minimum, it is possible that output voltage will oscillate. Slowly rotate the VOLT adjust clockwise. The voltage output will increase and stabilize. Increase the voltage to the desired value. In this situation, only the green LED will stay lit.

Stability

This potentiometer permits variation of the regulator's response to generator load changes so as to limit overcompensation and obtain a minimum recovery time to the normal voltage output.

In order to adjust the regulator stability the generator must be running at no-load and the output must be monitored.

Turn the STAB adjust slowly clockwise until the voltage starts to fluctuate. At this point rotate the STAB adjust counterclockwise until the voltage is stable within 1 or 2 tenths of a volt.

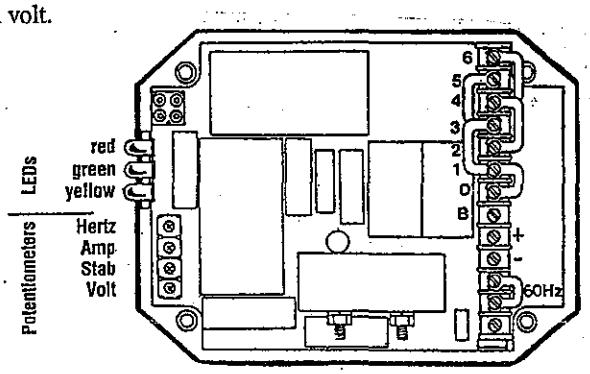

VOLTAGE REGULATOR DIAGRAM

Amp-Hertz

These two adjustments are used in conjunction with the two protection circuits in the voltage regulator that are indicated by the illumination of colored LED lights.

1. Delayed overload protection (yellow LED).
2. Low speed protection (red LED).

Both systems have an intervention threshold which can be adjusted using the respective potentiometer. Each of the two circuits are able to cause an adequate reduction in excitor voltage to safeguard the excitor windings and prevent their overheating.

The overload protection system has a delay which permits temporary overloading of the generator during times such as motor start-up or other similar load surge demands. The regulator also has a third LED (green), that glows during generator operation to indicate correct operation of the regulator with the generator.

Setting the Overload Protection

In order to set the AMP overload protection, the generator must be loaded to its full output rating.

1. Load the generator to its rating, then decrease the speed of the engine by 10.10% (54 Hertz on 60 hertz units, 45 hertz on 50 hertz units).
2. Rotate the AMP adjustment counterclockwise until it hits its stop. Wait about 15-20 seconds after which the AC output of the generator should drop and the yellow LED light should come on.
3. Slowly rotate the AMP adjustment clockwise until the output voltage increases to approximately 97% of the voltage output at the start of the adjustment. At this point the yellow LED light should come on.
4. Return to nominal speed, the yellow LED will turn off and the generator voltage will rise to its normal value. Should this not happen, repeat the adjustment.

NOTE: *When changing from 60 hertz to 50 hertz operation, remove the 60 hertz jumper bar from the regulator board.*

Setting the Underspeed Protection

NOTE: *If the unit is operating at 60 Hertz ensure that the jumper strap is in place on the regulator board between the two 60 Hertz terminals. In order to adjust the underspeed setting, the generator should be running at no-load.*

1. To adjust the underspeed (low frequency) protection circuit, lower the engine speed at 90% of its normal running speed (54 hertz on 60 hertz units, 45 hertz on 50 hertz units.
2. Rotate the Hertz adjustment counterclockwise slowly until the generator's AC output voltage starts to decrease and at the same time the red "LED" light comes on.
3. Increase the engine speed to its normal speed (frequency). The red "LED" light will go out and the AC voltage output will return to normal.

With the above adjustments made, the regulator should function normally.

BT GENERATOR INTERNAL WIRING
3 PHASE TWELVE WIRE RECONNECTABLE

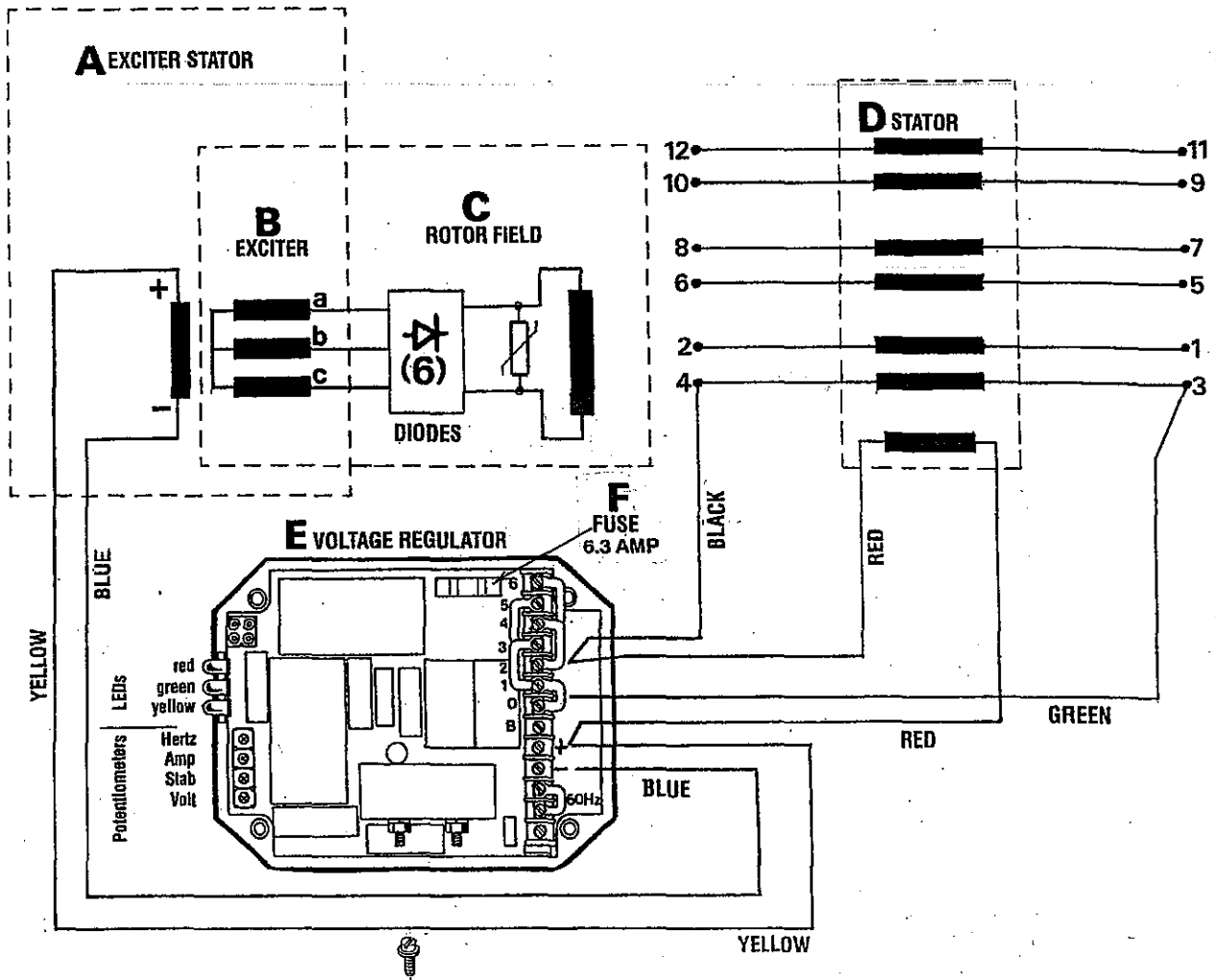

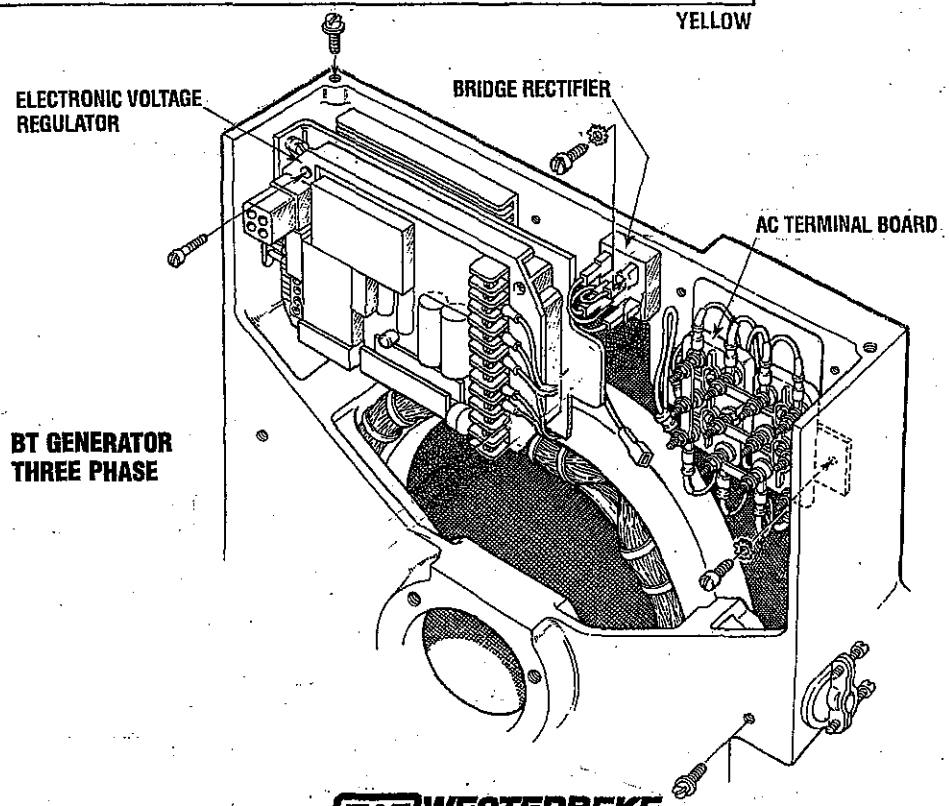

BT GENERATOR
THREE PHASE

REGULATOR SENSING 3 PHASE WYE-DELTA CONFIGURATIONS

NOTE: *WESTERBEKE recommends that the following generator tests and adjustments be performed by a qualified technician.*

Description

The regulator is equipped with seven numbered terminals (0 to 6) and their related brass jumpers. The illustrations shown connection points and jumpers for the 3 phase configuration of the generator. The sensing leads connect between pin #1 and pin #2 on the AC terminal block and connection #2 and #0 on the voltage regulator board.

NOTE: *Series Delta requires the installation of a jumper on the regulator board between terminal B and 1.*

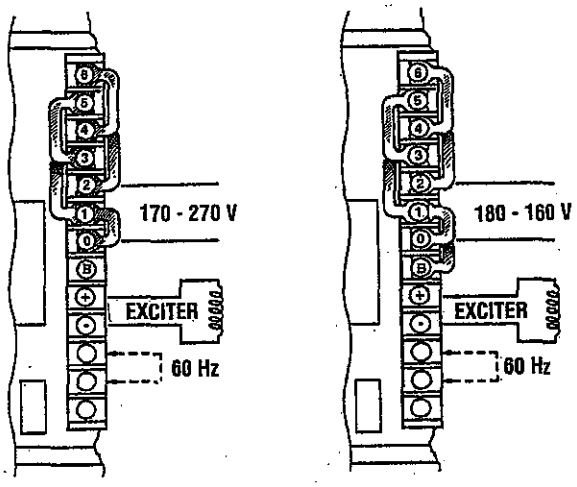

3 PHASE VOLTAGE REGULATOR

PARALLEL WYE (STAR)

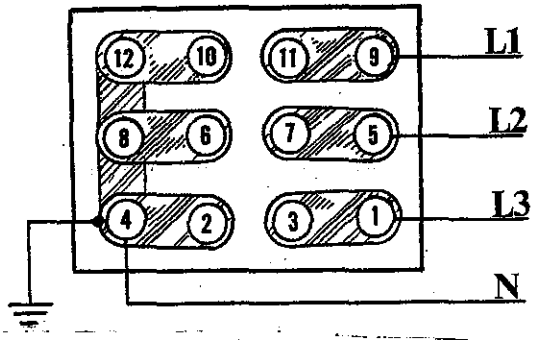

PARALLEL WYE (STAR)

L -L	240 VAC	3∅	50 HZ
L -N	138 VAC	1∅	60 HZ
L -L	200 VAC	3∅	50 HZ
L -N	115 VAC	1∅	60 HZ

SERIES WYE (STAR)

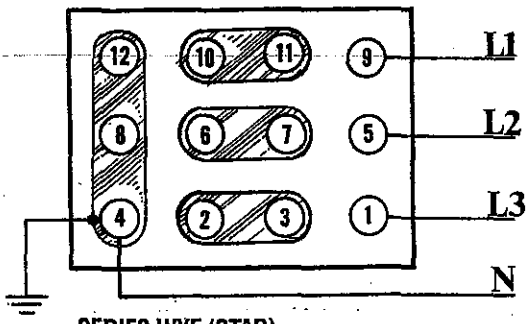

SERIES WYE (STAR)

L -L	480 VAC	3∅	60 HZ
L -N	277 VAC	1∅	60 HZ
L -L	400 VAC	3∅	50 HZ
L -N	230 VAC	1∅	50 HZ

SERIES DELTA

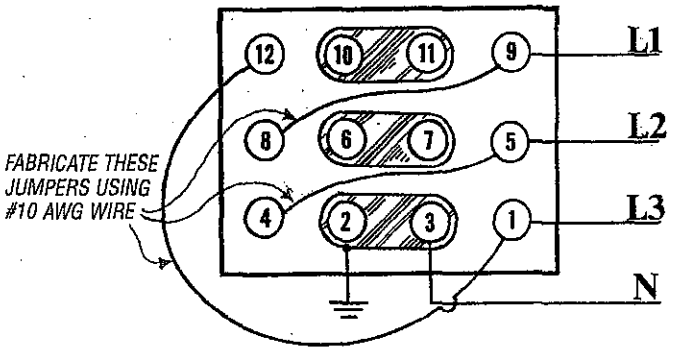

SERIES DELTA

L -L	270 VAC	3∅	60 HZ
L2, L3 -N	138 VAC	1∅	60 HZ
L -L	230 VAC	3∅	50 HZ
L2, L3 -N	115 VAC	1∅	50 HZ

BT GENERATOR - SINGLE PHASE (12 STUD)

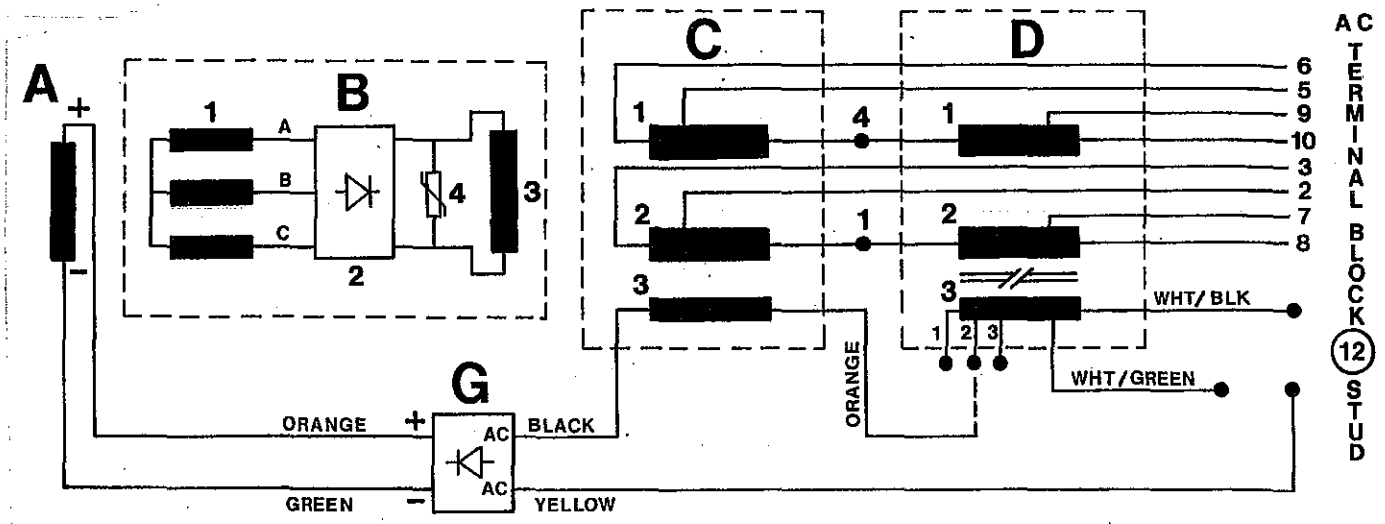

INTERNAL WIRING DIAGRAM

A. EXCITER STATOR WINDINGS
Resistance Value 10.0 Ohms

B. EXCITER ROTOR and FIELD
1. Auxiliary Windings (A - B - C)
2. Diodes (6)
3. Rotating Field Windings
4. Suppressor

C. MAIN STATOR
1. Main Stator Windings
2. Main Stator Windings
3. Main Stator Auxiliary Windings

D. COMPOUND TRANSFORMER
1. Compound Transformer Windings
2. Compound Transformer Windings
3. Compound Transformer Auxiliary Windings

G. BRIDGE RECTIFIER

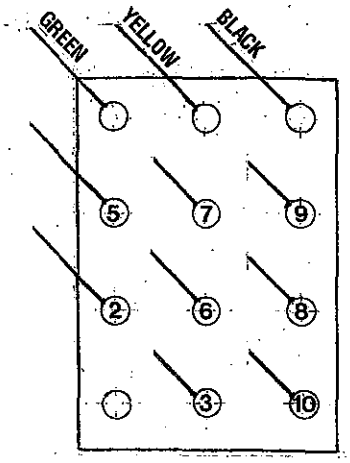

TERMINAL BLOCK
ELECTRICAL CONNECTIONS FROM GENERATOR

BT GENERATOR TROUBLESHOOTING CHART

NOTE: *WESTERBEKE recommends that the following generator tests and adjustments be performed by a qualified technician.*

The following troubleshooting chart is designed to give insight into problems which may be encountered with the BT brushless generators operating on compound transformer regulation. Owing to the simplicity of the equipment and controls, troubleshooting is relatively easy, once the relationship between cause and effect is understood. Most potential problems are covered in the text of this manual.

Keep in mind that a basic fundamental knowledge of electricity is required for this troubleshoting, and always remember that lethal voltages are present in the circuitry: therefore, extreme cautin is essential when troubleshooting a generator.

Only a few basic tools are necessary for diagnosis and repair. These are hand tools: an amprobe and a quality volt ohm meter capable of reading less than one ohm due to the precision required in reading component winding resistances.

Before attempting any repairs, get a clear explanation of the problem, preferably from an individual witnessing the problem. in some cases, this may bring to light a problem which is related to the method of operation rather than an equipment fault. Bring basic repair tools with you on the initial trip yo he problem equipment, such as giodes and a bridge rectifier, so that if theproblem should be found in one of these easily replaceable parts, the problem cab be remedied early and efficiently.

NOTE: *Refer to the INTERNAL WIRING DIAGRAMS when performing the following tests.*

Troubleshoot the components in the following order.

1. LOW VOLTAGE 60-100 VOLTS AC

Component Checks

- **F** Selector Switch
- **B** Rotor Components
  - **B2** Exciter Rotor Diodes
  - **B3** Rotor Field Winding
  - **B1** Exciter Rotor Winding(s) **a,b,c**
- **A** 1-1+2 Exciter Stator Winding(s)

2. NO AC VOLTAGE OUTPUT
Main Stator, Rotor Components, Transformer

Component Checks

- **C** 1+2 Main Stator Winding
- **B** 4 Posi Resistor
- **B** 2 Diodes (4-6 open/shorted)
- **D** 1+2 compound Transformer Winding
- **B** 3 Rotor Field Winding

3. RESIDUAL VOLTAGE
Exciter Circuit Faulty

Component Checks

- **A** 1-1+2 Exciter Stator Winding(s)
- **G** Bridge Rectifier
- **D** 3 Transformer Aux. Winding
- **C** 3 Main Stator Aux. Winding
- **F** Selector Switch

Circuit Connections
(from the Transformer Aux. winding to the connections on the Bridge Rectifier)

NOTE: *Reference the BT Troubleshooting guides on WESTERBEKE'S website under "TECHANICAL" for additional information. WWW.WESTERBEKE.COM.*

SPECIFICATIONS - ENGINE
8.0/6.0 KW EDT, 10.0/7.5 KW EDT, 11.5/9.2 KW EDT, 12.6/10.4KW EDT

GENERAL

Engine Type	Diesel, four-cycle, three-cylinder, fresh water-cooled, vertical in-line overhead valve mechanism.
Displacement	80.4 cubic inches (1.318 liter)
Aspiration	Naturally aspirated.
Combustion Chamber	Swirl type.
Bore & Stroke	3.07 x 3.62 inches (78 x 92 mm)
Firing Order	1 - 3 - 2
Direction of Rotation	Clockwise, when viewed from the front.
Compression Ratio	22:1
Weight	8.0 EDT 477 lbs (216 kilos) 10.0 EDT 520 lbs (236 kilos) 11.5 EDT 520 lbs (236 kilos) 12.6 EDT 520 lbs (236 kilos)
Inclination	Continuous 15° Temporary 25° (not to exceed 30 min.)

TUNE-UP SPECIFICATIONS

Compression Pressure Minimum	427 psi (30 kg/cm²) at 280 rpm 384 psi (27 kg/cm²)
Spilled Timing (Static)	17° (spill)
Valve Seat Angle	45°
Engine Timing	17° BTDC
Injector Pressure	1991 + 71 - 0 psi (140 + 5 - 0 kgf/cm²).
Valve Seat Angle	Intake 45° Exhaust 30°
Valve Clearance (engine cold)	0.25mm (0.0098 inches)
Engine Speed	1800 rpm (60 Hz) 1600 rpm (50 Hz)

LUBRICATION SYSTEM

General	Pressure fed system.
Oil Filter	Full flow, paper element, spin-on type.
Sump Capacity (not including filter)	3.9 U.S. qts (3.7 liters)
Operating Oil Pressure (engine hot)	50 – 60 psi (3.5 – 4.2 kg/cm²)
Oil Grade	API Specification CF or CG-4, CH-4 OR CI-4 SAE 30, 10W-40, 15W-40

FUEL SYSTEM

General	Open flow, self bleeding.
Fuel	No. 2 diesel oil (cetane rating of 45 or higher).
Fuel Injection Pump	In-line plunger type (BOSCH).
Nozzle	Throttle type.
Fuel Filter	Cartridge type (PN#030200).
Air Cleaner	Replaceable paper filter cartridge (#039705).
Fuel Lift Pump	12 volt DC lift capacity of 5' (1.5 mm) solid state

ELECTRICAL SYSTEM

Starting Battery	12 Volt, (–) negative ground
Battery Capacity	800 – 1000 Cold Cranking Amps (CCA)
DC Charging Alternator	50 Amp rated, belt-driven
Starting Aid	Glow plugs, sheathed type
Starter	12 Volt, reduction gear
Cold Cranking Amp Draw	240 - 250 amps (approx.)
Engine Combustion Air Requirements at 60 Hz 1800rpm	41 cfm (1.16 cmm)

COOLING SYSTEM

General	Fresh water-cooled block, thermostatically-controlled with heat exchanger.
Operating Temperature	170 – 190° F (77 – 88° C)
Fresh Water Pump	Centrifugal type, metal impeller, belt-driven.
Raw Water Pump	Positive displacement, rubber impeller, belt driven
Raw Water Flow at 1800 rpm (Measures before discharging into exhaust elbow)	7-8 gpm (25.9 - 29.6 gpm)
System Capacity (Fresh Water)	5.0 US qts (4.7 liters)

SPECIFICATIONS - GENERATOR 10.7/7.5KW EDT

AC GENERATOR (Single Phase)

Single Phase	Brushless, four-pole, revolving field. Pre-lubricated, single-bearing design. Reconnectable, single-phase transformer regulation (optional solid-state voltage regulation).	
Voltage	120 or 120/240 Volts - 60 Hertz 230 Volts - 50 Hertz.	
Voltage regulation:	±5% no load to full load.	
Frequency regulation:	.5 Hertz (.60%) no load to full load.	
Rating (Volts AC) **60 Hertz (1800 rpm)** **10.0 KW**	120 Volts 120/240 Volts	83.3 Amps 83.3/41.6 Amps
50 Hertz (1500 rpm) **7.5 KW**	230 Volts	22.6 Amps
Generator Cooling	225 - 250 cfm (5.66 - 6.37 cmm) Air Requirements(60 Hertz) at 1800 rpm	

NOTE: *Increase air supply 15% for 50 Hertz operation (1500 rpm).*

Engine Compartment	100 - 200 cfm (2.83 - 5.66 cmm)
Generator Compartment Ambient Temperature Recommendations	122°F (50°C) maximum

AC GENERATOR (3 Phase)

Three Phase **10.0 KW - 60 Hz** **7.5 KW - 50 Hz**	Brushless, six-pole, revolving field. Sealed lubricated, single-bearing design. 12 Lead reconnectable for low voltage WYE, high voltage Delta. Solid state voltage regulator with protection circuitry	
Voltage - 3 phase (60 Hertz)	Low Voltage WYE High Voltage WYE DELTA	240 Volts 480 Volts 240 Volts
Voltage - 3 Phase (50 Hertz)	High Voltage WYE DELTA	400 Volts 230 Volts
Amperage - 3 phase (60 Hertz)	Low Voltage WYE High Voltage WYE DELTA	35 Amps 15 Amps 30 Amps
Amperage - 3 phase (50 Hertz)	High Voltage WYE DELTA	14 Amps 24 Amps
Engine Compartment	100 - 200 cfm (2.83 - 5.66 cmm)	
Generator Cooling Air Requirements (60 Hertz) at 1800 rpm	225 - 250 cfm (5.66 - 6.37 cmm)	

NOTE: *Increase air supply 15% for 50 Hertz operation (1500 rpm).*

Generator Compartment Ambient Temperature Recommendations	122°F (50°C) maximum

8.0/6.0KW EDT

AC GENERATOR (Single Phase)

Single Phase	Brushless, four-pole, revolving field. Pre-lubricated, single-bearing design. Reconnectable, single-phase transformer regulation (optional solid-state voltage regulation).	
Voltage	120 or 120/240 Volts - 60 Hertz 230 Volts - 50 Hertz.	
Voltage regulation:	±5% no load to full load.	
Frequency regulation:	.5 Hertz (.60%) no load to full load.	
Rating (Volts AC) **60 Hertz (1800 rpm)** **8.0 KW**	120 Volts 120/240 Volts	66 Amps 66/33 Amps
50 Hertz (1500 rpm) **6.0 KW**	230 Volts	22.6 Amps
Generator Cooling Air Requirements (60 Hertz) at 1800 rpm	175 - 200 cfm (4.95 - 5.66 cmm)	

NOTE: *Increase air supply 15% for 50 Hertz operation (1500 rpm).*

Engine Compartment	100 - 200 cfm (2.83 - 5.66 cmm)
Generator Compartment Ambient Temperature Recommendations	122°F (50°C) maximum

SPECIFICATIONS - GENERATOR 11.5/9.2KW ETD

AC GENERATOR (Single Phase)

Single Phase	Brushless, four pole, revolving field. Pre-lubricated, single bearing design. Reconnectable, single phase transformer regulation (optional solid state voltage regulator)	
Voltage	120 or 120/240 volts - 60 hertz 230 Volts - 50 Hertz	
Voltage Regulation	±5% no load to full load.	
Frequency Regulation	.3 Hertz (.5%) no load to full load.	
Rating (Volts AC) **60 Hz (1800 rpm)** **11.5 KW**	120 volts 120/240 volts	95.8 amps 95.8/47.9 amps
50 Hz (1500 rpm) **9.2 KW**	230 volts	40 amps
Generator Cooling Air requirements (60 Hz) at 1800 rpm	225 - 250 cfm (5.66 - 6.37 cmm) **NOTE:** *Increase air supply 15% for 50 Hertz operation (1500 rpm)*	
Generator Compartment Ambient Temperature Recommendations	122°F (50°C) maximum **NOTE:** *Forced ventilation should be provided to maintain generator compartment temperatures below 122°F (50°C).*	

AC GENERATOR (3 Phase)

Three Phase **11.5 KW - 60 Hertz** **9.2 KW - 50 Hertz**	Brushless, six-pole, revolving field. Sealed lubricated, single-bearing design. 12 Lead reconnectable for low voltage WYE, high voltage Delta. Solid state voltage regulator with protection circuitry	
Voltage - 3 phase (60 Hertz)	Low Voltage WYE High Voltage WYE DELTA	240 Volts 480 Volts 240 Volts
Voltage - 3 Phase (50 Hertz)	High Voltage WYE DELTA	400 Volts 230 Volts
Amperage - 3 phase (60 Hertz)	Low Voltage WYE High Voltage WYE DELTA	34 Amps 17 Amps 34 Amps
Amperage - 3 phase (50 Hertz)	High Voltage WYE DELTA	16 Amps 29 Amps
Generator Cooling Air requirements (60 Hz) at 1800 rpm	225 - 250 cfm (5.66 - 6.37 cmm) **NOTE:** *Increase air supply 15% for 50 Hertz operation (1500 rpm)*	
Generator Compartment Ambient Temperature Recommendations	122°F (50°C) maximum **NOTE:** *Forced ventilation should be provided to maintain generator compartment temperatures below 122°F (50°C).*	

SPECIFICATIONS - GENERATOR 12.6/10.4KW ETD

AC GENERATOR (Single Phase)

Single Phase	Brushless, four pole, revolving field. Pre-lubricated, single bearing design. Reconnectable, single phase transformer regulation (optional solid state voltage regulator)	
Voltage	120 or 120/240 volts - 60 hertz 230 Volts - 50 Hertz	
Voltage Regulation	±5% no load to full load.	
Frequency Regulation	.3 Hertz (.5%) no load to full load.	
Rating (Volts AC) **60 Hz (1800 rpm)** **12.6 KW**	120 volts 120/240 volts	95.8 amps 195.8/49.9 amps
50 Hz (1500 rpm) **10.4 KW**	230 volts	40 amps
Generator Cooling Air requirements (60 Hz) at 1800 rpm	225 - 250 cfm (5.66 - 6.37 cmm) **NOTE:** *Increase air supply 15% for 50 Hertz operation (1500 rpm)*	
Generator Compartment Ambient Temperature Recommendations	122°F (50°C) maximum **NOTE:** *Forced ventilation should be provided to maintain generator compartment temperatures below 122°F (50°C)).*	

AC GENERATOR (3 Phase)

Three Phase **12.5 KW - 60 Hertz** **10.4 KW - 50 Hertz**	Brushless, six-pole, revolving field. Sealed lubricated, single-bearing design. 12 Lead reconnectable for low voltage WYE, high voltage Delta. Solid state voltage regulator with protection circuitry	
Voltage - 3 phase (60 Hertz)	Low Voltage WYE High Voltage WYE DELTA	240 Volts 480 Volts 240 Volts
Voltage - 3 Phase (50 Hertz)	High Voltage WYE DELTA	400 Volts 230 Volts
Amperage - 3 phase (60 Hertz)	Low Voltage WYE High Voltage WYE DELTA	38 Amps 19 Amps 38 Amps
Amperage - 3 phase (50 Hertz)	High Voltage WYE DELTA	18 Amps 32 Amps
Generator Cooling Air requirements (60 Hz) at 1800 rpm	225 - 250 cfm (5.66 - 6.37 cmm) **NOTE:** *Increase air supply 15% for 50 Hertz operation (1500 rpm)*	
Generator Compartment Ambient Temperature Recommendations	122°F (50°C) maximum **NOTE:** *Forced ventilation should be provided to maintain generator compartment temperatures below 122°F (50°C).*	

SPECIFICATIONS - ENGINE
12.5/9.4KW EDT & 15.0/12.0KW EDT

GENERAL

Engine Type	Diesel, four-cycle, four-cylinder, fresh water-cooled, vertical in-line overhead valve mechanism.
Displacement	107.3 cubic inches (1.758 liter)
Aspiration	Naturally aspirated.
Combustion Chamber	Swirl type.
Bore & Stroke	3.07 x 3.62 inches (78 x 92 mm)
Firing Order	1 - 3 - 4 -2
Direction of Rotation	Clockwise, when viewed from the front.
Compression Ratio	22:1
Dimensions - inches (mm) Engine Only	Height: 24.0 inches (609.6 mm) Width: 19.0 inches (482.6 mm) Length: 34.6 inches (878.8 mm)
Inclination	Continuous 15° (all directions) Temporary 25° (not to exceed 30 minutes)
Weight (dry)	
12.5/9.4KW	561 lbs (254.5 kgs)
15.0/12.0KW	569 lbs (258.1 kgs)
Fuel Consumption (full amperage load)	
12.5KW	1.19 gph (4.50 lph)
9.4KW	0.19 gph (3.44 lph)
15.0KW	1.42 gph (5.38 lph)
12.0KW	1.12 gph (4.24 lph)
HP @ 1800 RPM	25 HP
HP @ 1600 RPM	22 HP

TUNE-UP SPECIFICATIONS

Compression Pressure Minimum	427 psi (30 kg/cm²) at 280 rpm 384 psi (27 kg/cm²)
Spilled Timing (Static)	17° (spill) BTDC
Valve Seat Angle	Intake 45° Exhaust 30°
Engine Speed	1800 rpm (60Hz) 1500 rpm (50Hz)
Valve Seat Angle	Intake 45° Exhaust 30°
Valve Clearance	0.25 inches (0.0098 mm)
Injector Pressure	1991 + 71 - 0 psi (140 + 5 - 0 kgf/cm²).
Engine Timing	17° BTDC

ELECTRICAL SYSTEM

Starting Battery	12 Volt, (–) negative ground
Battery Capacity	800 – 1000 Cold Cranking Amps (CCA)
DC Charging Alternator	50 Amp rated, belt-driven
Starting Aid	Glow plugs, sheathed type
Starter	12 Volt, reduction gear

COOLING SYSTEM

General	Fresh water-cooled block, thermostatically-controlled with heat exchanger.
Operating Temperature	170 – 190° F (77 – 88° C)
Fresh Water Pump	Centrifugal type, metal impeller, belt-driven.
Raw Water Pump	Positive displacement, rubber impeller, belt driven
System Capacity (Fresh Water)	8.0 US qts (7.6 liters)
Raw Water Flow at 1800 rpm (Measures before discharging into exhaust elbow)	7-8 gpm (25.9 - 29.6 gpm)
Engine Combustion Air Requirements at at 1800 rpm	56 cfm (1.60 cmm)
Engine Combustion Air Requirements at at 1500 rpm	46 cfm (1.31 cmm)

LUBRICATION SYSTEM

General	Pressure fed system.
Oil Filter	Full flow, paper element, spin-on type.
Sump Capacity (not including filter)	4.5 U.S. qts (4.3 liters)
Operating Oil Pressure (engine hot)	40 – 60 psi (3.5 – 4.2 kg/cm²)
Oil Grade	API Specification CF or CG-4, CH-4 OR CI-4 SAE 30, 10W-40, 15W-40

SPECIFICATIONS - GENERATOR 12.5/9.4KW EDT

AC GENERATOR (Single Phase)

Single Phase	Brushless, four-pole, revolving field. Pre-lubricated, single-bearing design. Reconnectable, single-phase transformer regulation (optional solid-state voltage regulation).	
Voltage	120 or 120/240 Volts - 60 Hertz 230 Volts - 50 Hertz.	
Voltage regulation:	±5% no load to full load.	
Frequency Regulation	.3 Hertz (.5%) no load to full load.	
Rating (Volts AC) **60 Hertz (1800 rpm)** **12.5 KW**	120 Volts 120/240 Volts	104 Amps 104/52 Amps
50 Hertz (1500 rpm) **9.4 KW**	230 Volts	60 Amps
Generator Cooling Air Requirements (60 Hertz) at 1800 rpm	225 - 250 cfm (6.37 - 7.08 cmm) **NOTE:** *Increase air supply 15% for 50 Hertz operation (1500 rpm).*	
Generator Compartment Ambient Temperature Recommendations	122°F (50°C) maximum	

AC GENERATOR (3 Phase)

Three Phase **12.5 KW - 60 HERTZ** **9.4 KW - 50 HERTZ**	Brushless, six-pole, revolving field. Sealed lubricated, single-bearing design. 12 Lead reconnectable for low voltage WYE, high voltage Delta. Solid state voltage regulator with protection circuitry	
Voltage - 3 phase (60 Hertz)	Low Voltage WYE High Voltage WYE DELTA	240 Volts 480 Volts 240 Volts
Voltage - 3 Phase (50 Hertz)	High Voltage WYE DELTA	400 Volts 230 Volts
Amperage - 3 phase (60 Hertz)	Low Voltage WYE High Voltage WYE DELTA	38 Amps 18 Amps 37 Amps
Amperage - 3 phase (50 Hertz)	High Voltage WYE DELTA	17 Amps 30 Amps
Generator Compartment Ambient Temperature Recommendations	122°F (50°C) maximum	
Generator Cooling Air Requirements (60 Hertz) at 1800 rpm	225 - 250 cfm (6.37 - 7.08 cmm) **NOTE:** *Increase air supply 15% for 50 Hertz operation (1500 rpm).*	

15.0/12.0KW EDT

AC GENERATOR (Single Phase)

Single Phase	Brushless, four-pole, revolving field. Pre-lubricated, single-bearing design. Reconnectable, single-phase transformer regulation (optional solid-state voltage regulation).	
Voltage	120 or 120/240 Volts - 60 Hertz 220 Volts - 50 Hertz.	
Voltage regulation:	±5% no load to full load.	
Frequency Regulation	.3 Hertz (.5%) no load to full load.	
Rating (Volts AC) **60 Hertz (1800 rpm)** **15.0 KW**	120 Volts 120/240 Volts	105 Amps 105/52.5 Amps
50 Hertz (1500 rpm) **12.0 KW**	220 Volts	45.2 Amps
Generator Cooling Air Requirements (60 Hertz) at 1800 rpm	225 - 250 cfm (5.66 - 6.37 cmm) **NOTE:** *Increase air supply 15% for 50 Hertz operation (1500 rpm).*	
Generator Compartment Ambient Temperature Recommendations	122°F (50°C) maximum	

AC GENERATOR (3 Phase)

Three Phase **15.0 KW - 60 HERTZ** **12.0 KW - 50 HERTZ**	Brushless, six-pole, revolving field. Sealed lubricated, single-bearing design. 12 Lead reconnectable for low voltage WYE, high voltage Delta. Solid state voltage regulator with protection circuitry	
Voltage - 3 phase (60 Hertz)	Low Voltage WYE High Voltage WYE DELTA	240 Volts 480 Volts 240 Volts
Voltage - 3 Phase (50 Hertz)	High Voltage WYE DELTA	400 Volts 230 Volts
Amperage - 3 phase (60 Hertz)	Low Voltage WYE High Voltage WYE DELTA	38 Amps 18 Amps 37 Amps
Amperage - 3 phase (50 Hertz)	High Voltage WYE DELTA	17 Amps 30 Amps
Generator Cooling Air Requirements (60 Hertz) at 1800 rpm	225 - 250 cfm (6.37 - 7.08 cmm) **NOTE:** *Increase air supply 15% for 50 Hertz operation (1500 rpm).*	
Generator Compartment Ambient Temperature Recommendations	122°F (50°C) maximum	

LAY-UP & RECOMMISSIONING

GENERAL

Many owners rely on their boatyards to prepare their craft, including engines and generators, for lay-up during the off-season or for long periods of inactivity. Others prefer to accomplish lay-up preparation themselves.

The procedures which follow will allow you to perform your own lay-up and recommissioning, or you may use them as a check list if others do the procedures.

These procedures should afford your engine protection during a lay-up and also help familiarize you with the maintenance needs of your engine.

If you have any questions regarding lay-up procedures, call your local servicing dealer; he will be more than willing to provide assistance.

Propeller Shaft Coupling *[Propulsion Engine]*

The transmission and propeller half couplings should always be opened up and the bolts removed when the boat is hauled out of the water or moved from land to water, and during storage in the cradle. The flexibility of the boat often puts a severe strain on the propeller shaft or coupling or both, while the boat is taken out or put in the water. In some cases, the shaft has actually been bent by these strains. This does not apply to small boats that are hauled out of the water when not in use, unless they have been dry for a considerable period of time.

Fresh Water Cooling Circuit

A 50-50 solution of antifreeze and distilled water is recommended for use in the coolant system at all times. This solution may require a higher concentration of antifreeze, depending on the area's winter climate. Check the solution to make sure the antifreeze protection is adequate.

Should more antifreeze be needed, drain an appropriate amount from the engine block and add a more concentrated mixture. Operate the engine to ensure a complete circulation and mixture of the antifreeze concentration throughout the cooling system. Now recheck the antifreeze solution's strength.

Lubrication System

With the engine warm, drain all the engine oil from the oil sump. Remove and replace the oil filter and fill the sump with new oil. Use the correct grade of oil. Refer to the *ENGINE LUBRICATING OIL* pages in this manual for the oil changing procedure. Run the engine and check for proper oil pressure and make sure there are no leaks.

> ⚠ **CAUTION:** ***Do not leave the engine's old engine oil in the sump over the lay-up period. Lubricating oil and combustion deposits combine to produce harmful chemicals which can reduce the life of your engine's internal parts.***

Fuel System *[Gasoline]*

Top off your fuel tanks with *unleaded* gasoline of 89 octane or higher. A fuel conditioner such as *Sta-Bil* gasoline stabilizer should be added. Change the element in your gasoline/water separator and clean the metal bowl. Re-install and make certain there are no leaks. Clean up any spilled fuel.

Fuel System *[Diesel]*

Top off your fuel tanks with No. 2D diesel fuel. Fuel additives should be added prior to topping off to ensure they mix with the fuel being added and fuel still in the tank. Additives such as Bio-bor and Diesel Kleen + Cetane Boost should be added at this time to control bacteria growth and condition the fuel.. Care should be taken that the additives used are compatible with the primary fuel filter/water separator used in the system. Change the element in your primary fuel filter/water separator and clean the separator sediment bowl.

Change the fuel filter elements on the engine and bleed the fuel system, as needed. Start the engine and allow it to run for 5 – 10 minutes to make sure no air is left in the fuel system. Check for any leaks that may have been created in the fuel system during this servicing, correcting them as needed. Operating the engine for 5 – 10 minutes will help allow movement of the treated fuel through the injection equipment on the engine.

Raw Water Cooling Circuit

Close the through-hull seacock. Remove the raw water intake hose from the seacock. Place the end of this hose into a five gallon bucket of clean fresh water. Before starting the engine, check the zinc anode found in the primary heat exchanger on the engine and clean or replace it as required, and also clean any zinc debris from inside the heat exchanger where the zinc anode is located. Clean the raw water strainer.

Start the engine and allow the raw water pump to draw the fresh water through the system. When the bucket is empty, stop the engine and refill the bucket with an antifreeze solution slightly stronger than needed for winter freeze protection in your area.

Start the engine and allow all of this mixture to be drawn through the raw water system. Once the bucket is empty, stop the engine. This antifreeze mixture should protect the raw water circuit from freezing during the winter lay-up, as well as providing corrosion protection.

Remove the impeller from your raw water pump (some antifreeze mixture will accompany it, so catch it in a bucket). Examine the impeller. Acquire a replacement, if needed, and a cover gasket. Do not replace the impeller (into the pump) until recommissioning, but replace the cover and gasket.

Cylinder Lubrication *[Gasoline]*

Spray fogging oil into the open air intake, with the flame arrester removed, while the engine is running. The fogging oil will stall out the engine and coat the valves, cylinders and spark plugs for winter protection.

Starter Motor

Lubrication and cleaning of the starter drive pinion is advisable, if access to the starter permits its easy removal. Make sure the battery connections are shut off before attempting to remove the starter. Take care in properly replacing any electrical connections removed from the starter.

Cylinder Lubrication *[Diesel]*

If you anticipate a long lay-up period (12 months or more) WESTERBEKE recommends removal of the glow plugs for access to the cylinders. Squirt some Marvel Mystery Oil into each cylinder to help prevent the piston rings from adhering to the cylinder walls. Rotate the engine crankshaft by hand two revolutions and re-install the glow plugs.

If your engine does not have glow plugs, the injectors will have to be removed. Be sure to have replacement sealing washers for the injectors and return fuel line as needed.

Intake Manifold *[Gasoline]*

Clean the filter screen in the flame arrester, and place a clean cloth lightly soaked in lube oil around the flame arrester to block any opening. Also place an oil-soaked cloth in the through-hull exhaust port, Make a note to remove cloths prior to start-up!

Cylinder Lubrication *[Gasoline]*

Spray fogging oil into the open air intake, with the flame arrester removed, while the engine is running. The fogging oil will stall out the engine and coat the valves, cylinders and spark plugs for winter protection.

NOTE: *At spring commissioning, remove the plugs and rotate the crankshaft two full revolutions. Re-install the spark plugs, tightening properly and connecting the high tension leads fully onto each spark plug.*

Batteries

If batteries are to be left on board during the lay-up period, make sure that they are fully charged, and will remain that way, to prevent them from freezing. If there is any doubt that the batteries will not remain fully charged, or that they will be subjected to severe environmental conditions, remove the batteries and store them in a warmer, more compatible environment.

> ⚠ **WARNING:** ***Lead acid batteries emit hydrogen, a highly-explosive gas, which can be ignited by electrical arcing or a lighted cigarette, cigar, or pipe. Do not smoke or allow an open flame near the battery being serviced. Shut off all electrical equipment in the vicinity to prevent electrical arcing during servicing.***

Transmission *[Propulsion Engine]*

Check or change the fluid in the transmission as required Wipe off grime and grease and touch up any unpainted areas. Protect the coupling and the output flange with an anti-corrosion coating. Check that the transmission vent is open. For additional information, refer to the *TRANSMISSION SECTION.*

Spare Parts

Lay-up time provides a good opportunity to inspect your Westerbeke engine to see if external items such as drive belts or coolant hoses need replacement. Check your basic spares kit and order items not on hand, or replace those items used during the lay-up, such as filters and zinc anodes. Refer to the *SPARE PARTS* section of this manual.

Recommissioning

The recommissioning of your Westerbeke engine after a seasonal lay-up generally follows the same procedures as those described in the *PREPARATIONS FOR STARTING* section regarding preparation for starting and normal starts. However, some of the lay-up procedures will need to be counteracted before starting the engine.

1. Remove the oil-soaked cloths from the intake manifold.
2. Remove the raw water pump cover and gasket and discard the old gasket. Install the raw water pump impeller removed during lay-up (or a replacement, if required). Install the raw water pump cover with a new cover gasket.
3. Reinstall the batteries that were removed during the lay-up, and reconnect the battery cables, making sure the terminals are clean and that the connections are tight. Check to make sure that the batteries are fully charged.

> ⚠ **CAUTION:** ***Wear rubber gloves, a rubber apron, and eye protection when servicing batteries. Lead acid batteries emit hydrogen, a highly explosive gas, which can be ignited by electrical arcing or a lighted cigarette, cigar, or pipe. Do not smoke or allow an open flame near the battery being serviced. Shut off all electrical equipment in the vicinity to prevent electrical arcing during servicing.***

4. Remove the spark plugs, wipe clean, re-gap, and install to proper tightness *[gasoline]*.
5. Check the condition of the zinc anode in the raw water circuit and clean or replace the anode as needed. Note that it is not necessary to flush the antifreeze/fresh water solution from the raw water coolant system. When the engine is put into operation, the system will self-flush in a short period of time with no adverse affects. It is advisable, as either an end of season or recommissioning service, to inspect the area where the zinc is located in the heat exchanger and clear any and all zinc debris from that area.
6. Start the engine in accordance with procedures described in the *PREPARATIONS FOR STARTING* section of this manual.

POWER TAKE OFF SYSTEMS

POWER TAKE OFF ADAPTER

A power take off adapter can be attached to the generator backend. This adapter allows access to the full power of the engine for a variety of hydraulic and electrical accessories.

The 8.0, 10.0. and 12.6 Kw generators produce 18hp at 1800 rpm (16hp at 1500 rpm).

The 11.5Kw produces 15hp at 1800 rpm (12hp at 1500 rpm)

The 15.0Kw generator produces 25hp at 1800 rpm (22hp at 1500 rpm.

This horsepower can be utilized either for generator AC output or to operate the power takeoff.

Contact your WESTERBEKE DEALER for additional information.

POWER TAKE OFF KITS

KIT #034786 FOR 12 STUD BT UNITS
KIT #037134 FOR 6 STUD BT UNITS

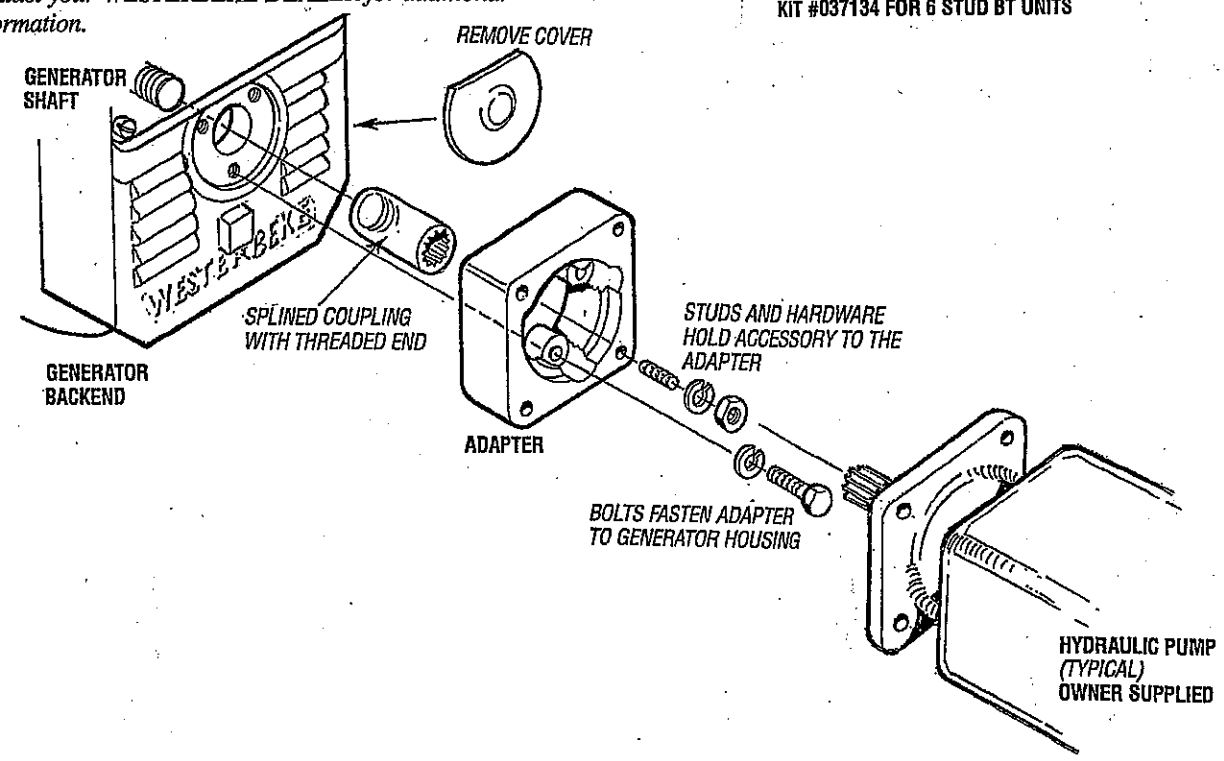

RAW WATER DISCHARGE HOSE
[When a siphon break is not required]

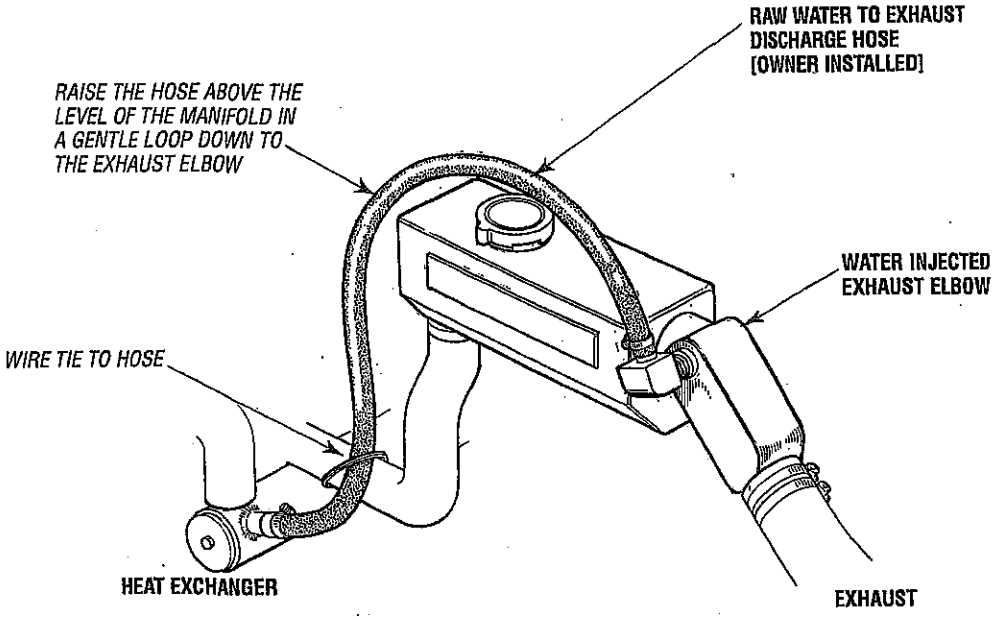

WHEN A SYPHON BREAK IS NOT REQUIRED

WESTERBEKE recommends that the hose (installer supplied) discharging raw water from the heat exchanger to the water injected exhaust elbow be looped above and down to the inlet fitting on the elbow. The hose can be secured by a plastic wire tie as illustrated.

HOT WATER TANK CONNECTIONS

WATER HEATER INSTALLATIONS

These engines are equipped with connections for the plumbing of engine coolant to transfer heat to an on-board water heater. The water heater should be mounted in a convenient location either in a high or low position in relation to the engine, so that the connecting hoses from the heater to the engine can run in a reasonably direct line without any loops which might trap air.

Hoses should rise continuously from their low point at the heater to the engine so that air will rise naturally from the heater to the engine. If trapped air is able to rise to the heater, then an air bleed petcock must be installed at the higher fitting on the heater for bleeding air while filling the system.

WATER HEATER CONNECTIONS

CONNECT TWO HOSES TO AND FROM THE HOT WATER HEATER AS SHOWN HERE. (ARROWS INDICATE THE COOLANT FLOW DIRECTION).

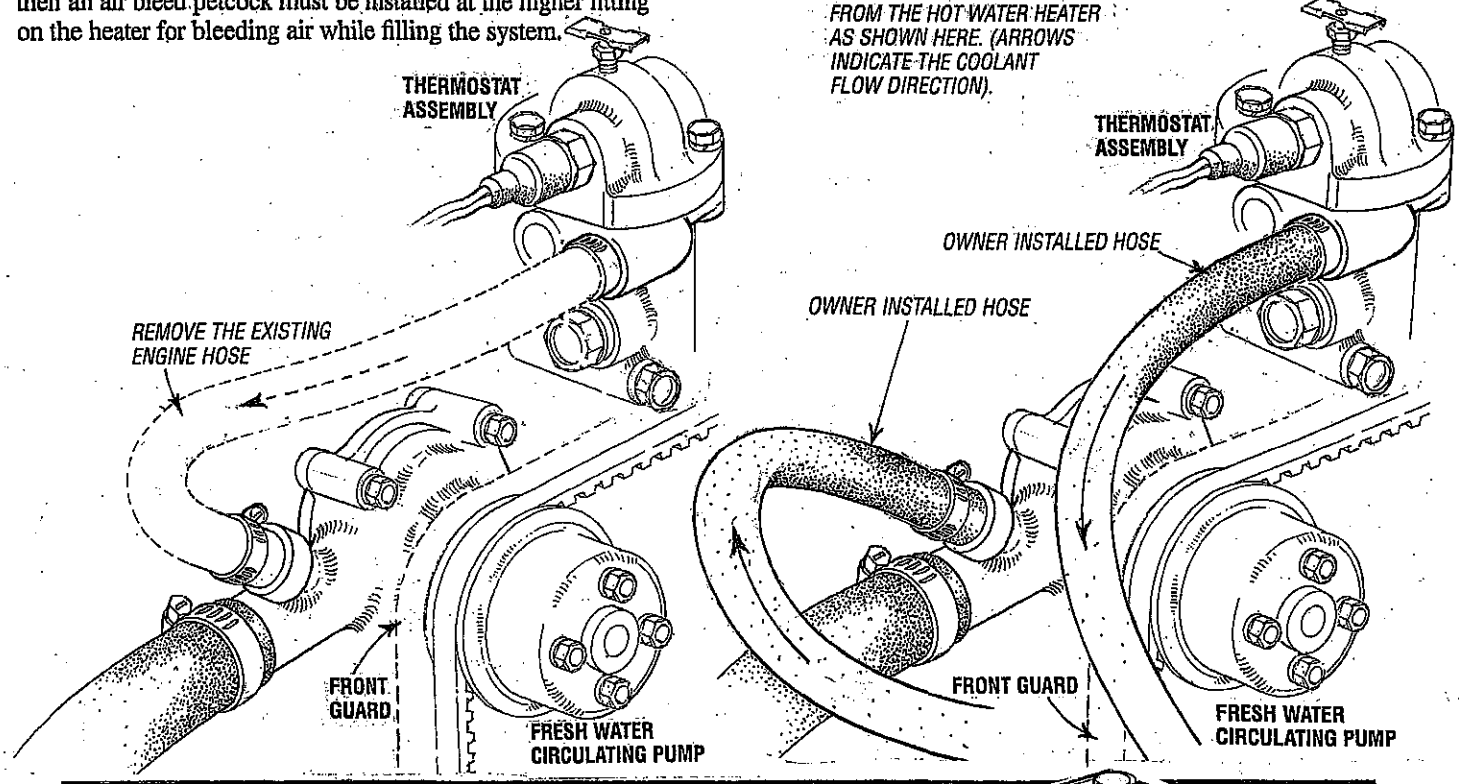

HEATING CIRCUIT ABOVE THE ENGINE

NOTE: *If any portion of the heating circuit rises above the engine's own pressure cap, then a pressurized (aluminum) remote expansion tank (Kit #024177)* ***must*** *be installed in the circuit to become the highest point. Tee the remote expansion tank into the heater circuit, choosing the higher of the two connections for the return. Tee at the heater, and plumb a single line up to the tanks location and the other back to the engine's return. Install the remote expansion tank in a convenient location so the coolant level can easily be checked. The remote expansion tank will now serve as a check and system fill point.* ***The plastic coolant recovery tank is not used when the remote expansion tank kit is installed, since this tank serves the same function.*** *Remove and store the plastic recovery tank if it has been already installed.*

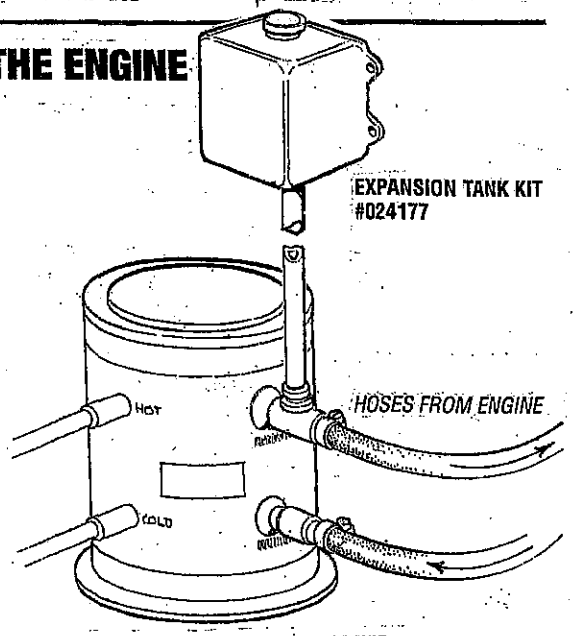

TYPICAL HOT WATER TANK

STANDARD AND METRIC CONVERSION DATA

LENGTH-DISTANCE

Inches (in) x 25.4 = Millimeters (mm) x .0394 = Inches
Feet (ft) x .305 = Meters (m) x 3.281 = Feet
Miles x 1.609 = Kilometers (km) x .0621 = Miles

VOLUME

Cubic Inches (in^3) x 16.387 = Cubic Centimeters x .061 =in^3
Imperial Pints (IMP pt) x .568 = Liters (L) x 1.76 = IMP pt
Imperial Quarts (IMP qt) x 1.137 = Liters (L) x.88 = IMP qt
Imperial Gallons (IMP gal) x 4.546 = Liters (L) x .22 = IMP gal
Imperial Quarts (IMP qt) x 1.201 = US Quarts (US qt) x .833 = IMP qt
Imperial Gallons (IMP gal) x 1.201 = US Gallons (US gal) x .833 = IMP gal
Fluid Ounces x 29.573 = Milliliters x .034 = Ounces
US Pints (US pt) x .473 = Liters(L) x 2.113 = Pints
US Quarts (US qt) x .946 = Liters (L) x 1.057 = Quarts
US Gallons (US gal) x 3.785 = Liters (L) x .264 = Gallons

MASS-WEIGHT

Ounces (oz) x 28.35 = Grams (g) x .035 = Ounces
Pounds (lb) x .454 = Kilograms (kg) x 2.205 = Pounds

PRESSURE

Pounds Per Sq In (psi) x 6.895 = Kilopascals (kPa) x .145 = psi
Inches of Mercury (Hg) x .4912 = psi x 2.036 = Hg
Inches of Mercury (Hg) x 3.377 = Kilopascals (kPa) x .2961 = Hg
Inches of Water (H_2O) x .07355 = Inches of Mercury x 13.783 = H_2O
Inches of Water (H_2O) x .03613 = psi x 27.684 = H_2O
Inches of Water (H_2O) x .248 = Kilopascals (kPa) x 4.026 = H_2O

TORQUE

Pounds-Force Inches (in-lb) x .113 = Newton Meters (Nm) x 8.85 =in-lb
Pounds-Force Feet (ft-lb) x 1.356 = Newton Meters (Nm) x .738 = ft-lb

VELOCITY

Miles Per Hour (MPH) x 1.609 = Kilometers Per Hour (KPH) x .621 = MPH

POWER

Horsepower (Hp) x .745 = Kilowatts (Kw) x 1.34 = MPH

FUEL CONSUMPTION

Miles Per Hour IMP (MPG) x .354 = Kilometers Per Liter (Km/L)
Kilometers Per Liter (Km/L) x 2.352 = IMP MPG
Miles Per Gallons US (MPG) x .425 = Kilometers Per Liter (Km/L)
Kilometers Per Liter (Km/L) x 2.352 = US MPG

TEMPERATURE

Degree Fahrenheit (°F) = (°C X 1.8) + 32
Degree Celsius (°C) = (°F - 32) x .56

SUGGESTED SPARE PARTS

WESTERBEKE MARINE DIESEL GENERATORS

CONTACT YOUR WESTERBEKE DEALER FOR SUGGESTIONS AND ADDITIONAL INFORMATION

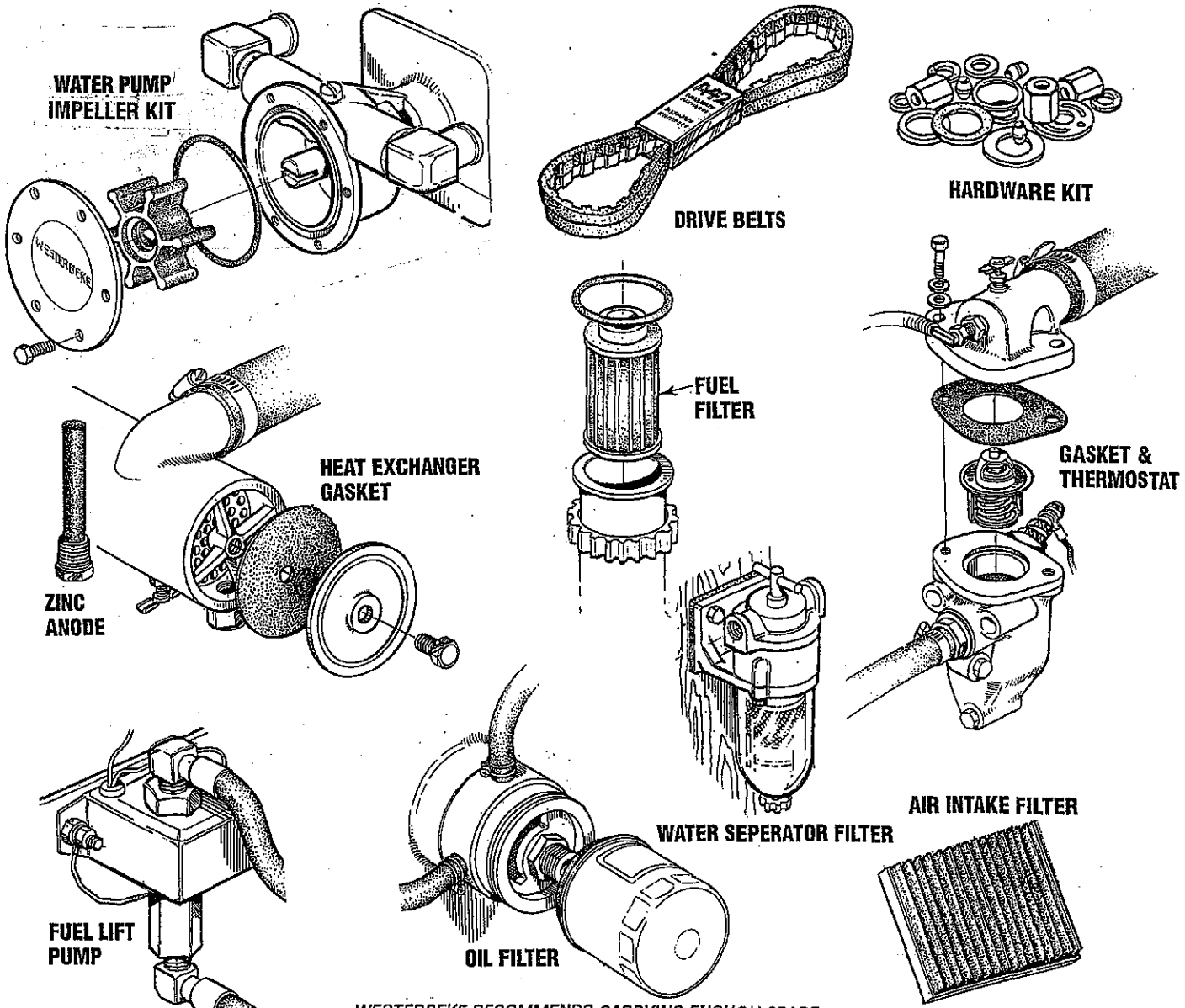

WESTERBEKE RECOMMENDS CARRYING ENOUGH SPARE ENGINE OIL (YOUR BRAND) FOR AN OIL CHANGE (5 QTS.) AND A GALLON OF PREMIXED COOLANT.

SPARE PARTS KITS

WESTERBEKE also offers two Spare Parts Kits, each packaged in a rugged hinged toolbox.
Kit "A" includes the basic spares.
Kit "B" is for more extensive off-shore cruising.

A Kit

- Impeller Kit
- Heat Exchanger Gasket
- Fuel Filter with Gasket
- Oil Filter
- Drive Belt
- Zinc Anodes

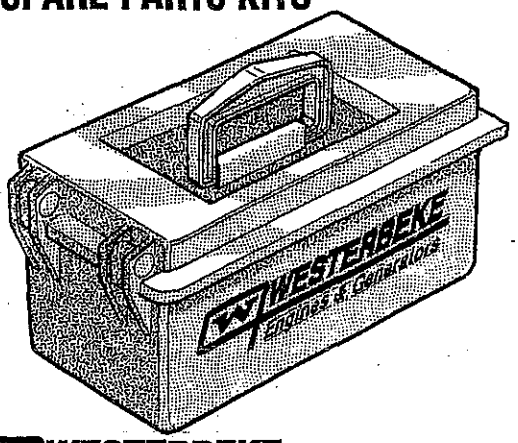

B Kit

- Impeller Kit
- Water Pump Repair Kit
- Thermostat Kit
- Zinc Anodes
- Complete Gasket Kit
- Heat Exchanger Gasket
- Injector
- Fuel Filter with Gasket
- Oil Filter
- Drive Belt

WESTERBEKE
Engines & Generators

WESTERBEKE
Engines & Generators

1149-11/2011