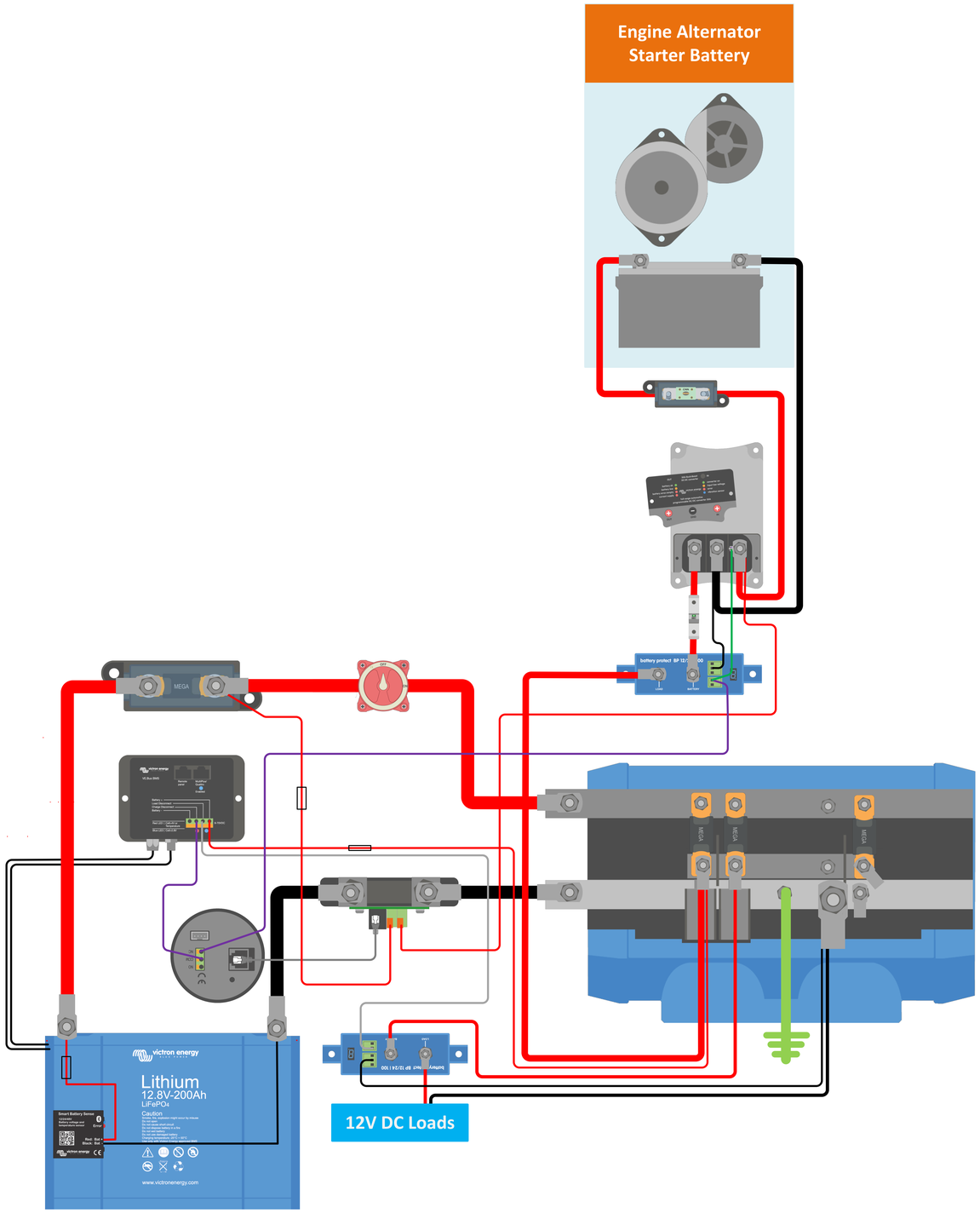
Engine Alternator
Starter Battery
MEGA
Lithium
12.8V-200Ah
LiFePO4
12V DC Loads