PARTS LIST

WESTERBEKE

13 • 18 • 21 • 27 • 33
Marine Diesel Engines
4.4 • 6 • 7.7 • 8 • 11 • 12.5 KW
Marine Diesel Generators

Publication # 32139
Edition Four
July 1986

WESTERBEKE

WESTERBEKE CORPORATION
MYLES STANDISH INDUSTRIAL PARK
150 JOHN HANCOCK ROAD, TAUNTON, MA 02780-7319

PARTS LIST

WESTERBEKE

13 • 18 • 21 • 27 • 33
Marine Diesel Engines
4.4 • 6 • 7.7 • 8 • 11 • 12.5 KW
Marine Diesel Generators

Publication # 32139
Edition Four
July 1986

WESTERBEKE

WESTERBEKE CORPORATION
MYLES STANDISH INDUSTRIAL PARK
150 JOHN HANCOCK ROAD, TAUNTON, MA 02780-7319

IMPORTANT

PRODUCT SOFTWARE NOTICE

Product software of all kinds, such as brochures, drawings, technical data, operator's and workshop manuals, parts lists and parts price lists, and other information, instructions and specifications provided from sources other than Westerbeke, is not within Westerbeke's control and, accordingly, is provided to Westerbeke customers only as a courtesy and service. WESTERBEKE CANNOT BE RESPONSIBLE FOR THE CONTENT OF SUCH SOFTWARE, MAKES NO WARRANTIES OR REPRESENTATIONS WITH RESPECT THERETO, INCLUDING THE ACCURACY, TIMELINESS OR COMPLETENESS THEREOF, AND WILL IN NO EVENT BE LIABLE FOR ANY TYPE OF DAMAGES OR INJURY INCURRED IN CONNECTION WITH, OR ARISING OUT OF, THE FURNISHING OR USE OF SUCH SOFTWARE.

For example, components and sub-assemblies incorporated in Westerbeke's products and supplied by others (such as engine blocks, fuel systems and components, transmissions, electrical components, pumps and other products) are generally supported by their manufacturers with their own software, and Westerbeke must depend on such software for the design of Westerbeke's own product software. Such software may be outdated and no longer accurate. Routine changes made by Westerbeke's suppliers, of which Westerbeke rarely has notice in advance, are frequently not reflected in the supplier's software until after such changes take place.

Westerbeke customers should also keep in mind the time span between printings of Westerbeke product software, and the unavoidable existence of earlier, non-current Westerbeke software editions in the field. Additionally, most Westerbeke products include customer-requested special features that frequently do not include complete documentation.

In sum, product software provided with Westerbeke products, whether from Westerbeke or other suppliers, must not and cannot be relied upon exclusively as the definitive authority on the respective product. It not only makes good sense, but is imperative that appropriate representatives of Westerbeke or the supplier in question be consulted to determine the accuracy and currency of the product software being consulted by the customer.

THIS PARTS LIST COVERS A FAMILY OF FIVE ENGINE BLOCKS USED FOR PROPULSION AND GENERATOR APPLICATIONS. THE ORIGINAL VERSION OF EACH INCORPORATED A TWO PASS WATER COOLED EXHAUST MANIFOLD AND A COMMON FLYWHEEL HOUSING FOR BOTH PROPULSION AND GENERATOR. THE SECOND OR "A" VERSION HAS A SINGLE PASS WATER COOLED EXHAUST MANIFOLD, GENERATORS ARE BRUSHLESS AND THE OVER-ALL SIZE HAS BEEN MADE MORE COMPACT ON BOTH THE PROPULSION AND GENERATOR UNITS.

REFERENCES IN THE BOOK FOR ENGINE COMPONENTS MAY INDICATE THE PROPULSION MODEL BUT ARE ACTUALLY APPLICABLE TO BOTH PROPULSION AND GENERATOR UNITS. (IE: PISTONS, FILTERS, GASKETS, PUMPS, BEARINGS, ETC.)

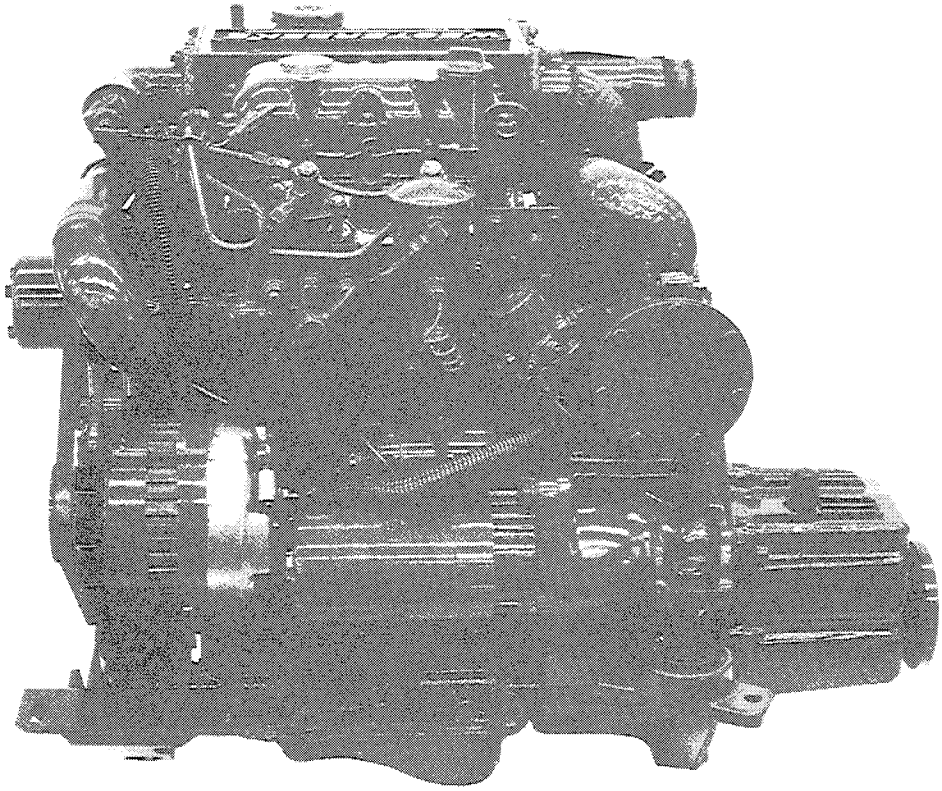

WESTERBEKE 13

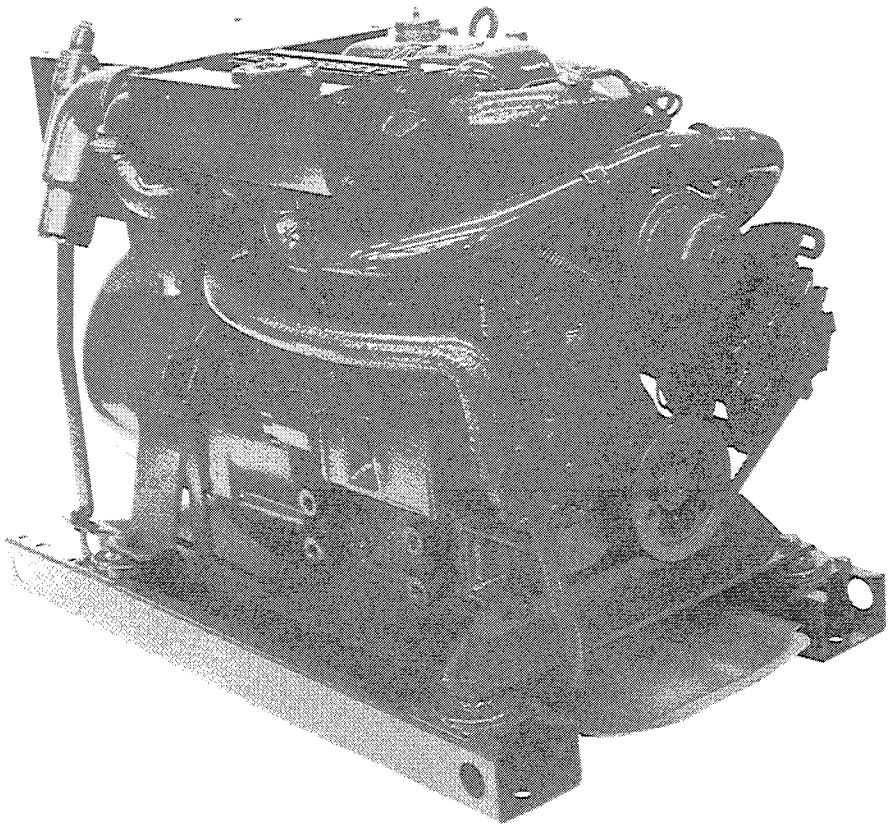

WMD 4.4KW GENERATOR

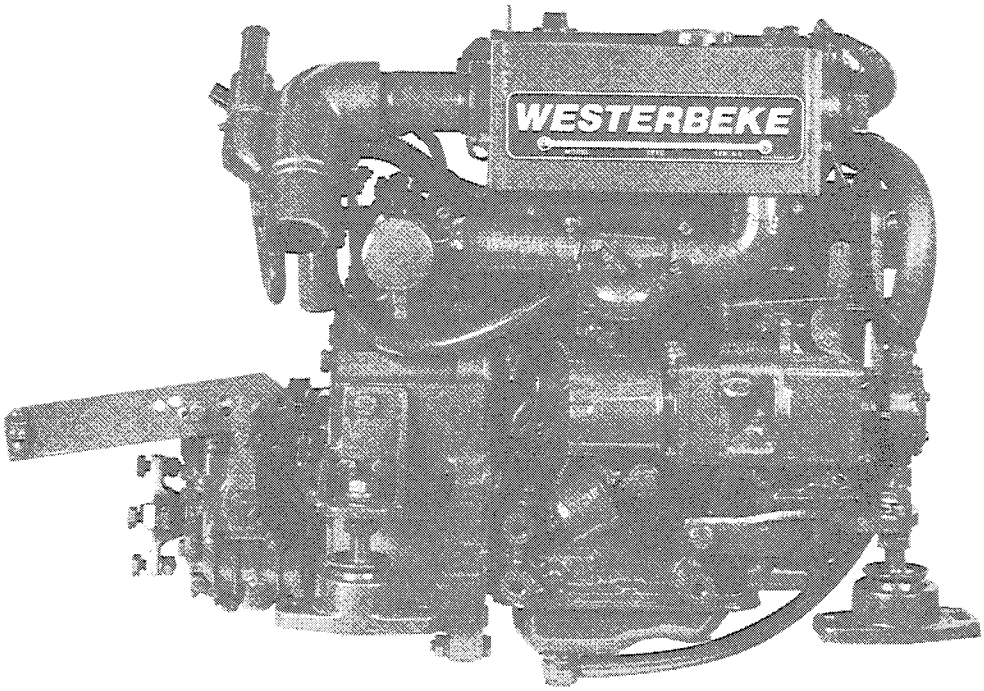

WESTERBEKE 13A

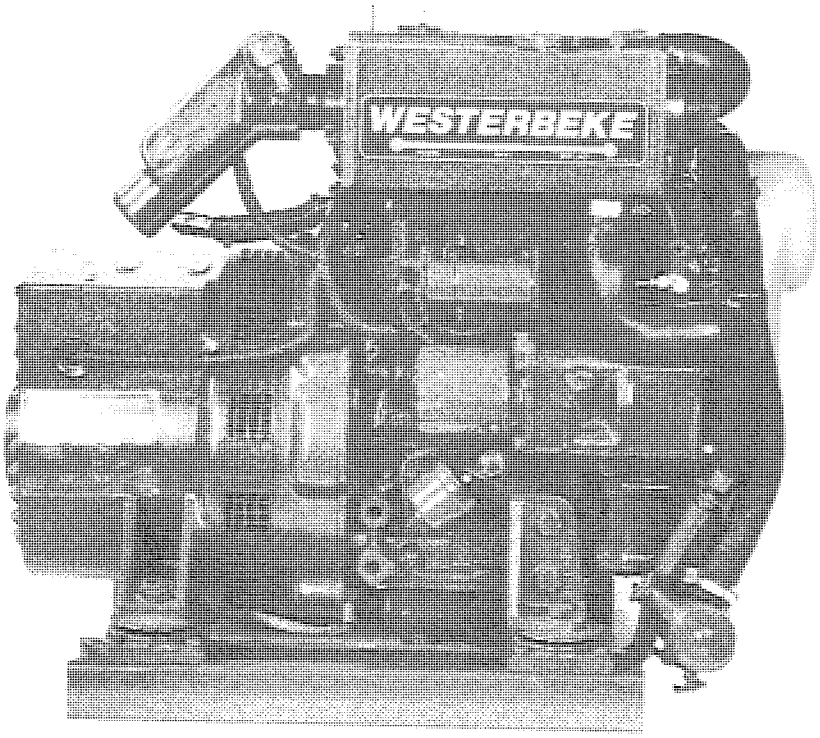

BCD-4.4KW GENERATOR

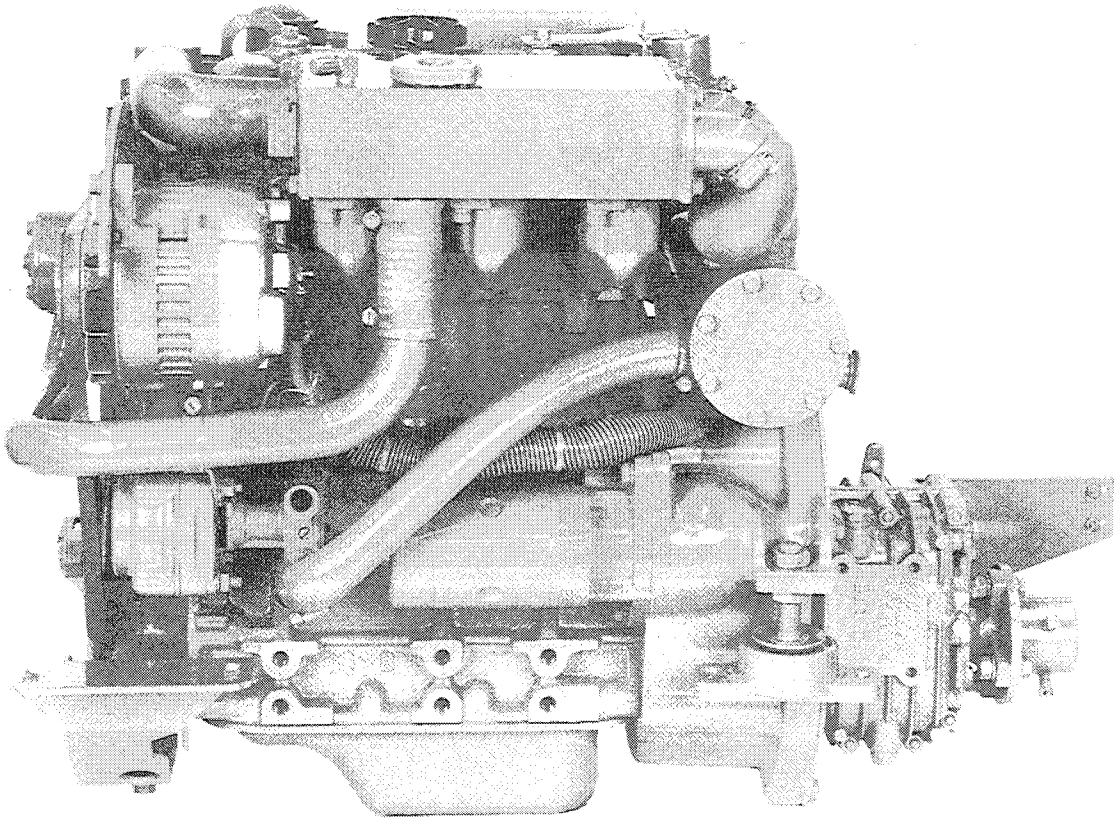

WESTERBEKE 21

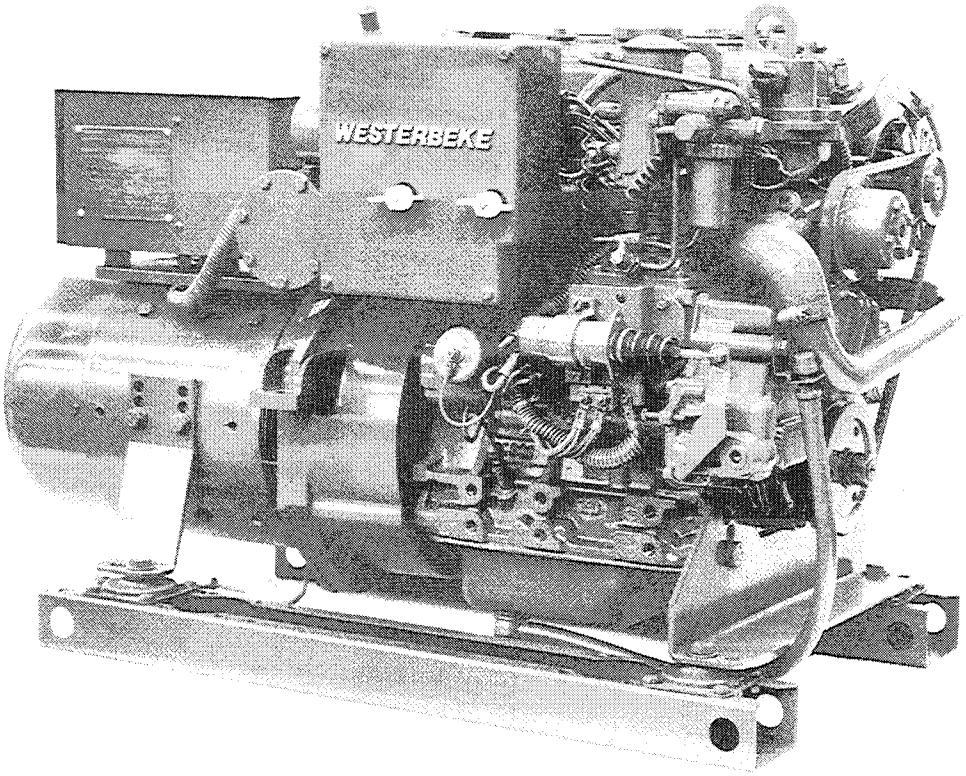

WMD 7.7-8KW GENERATOR

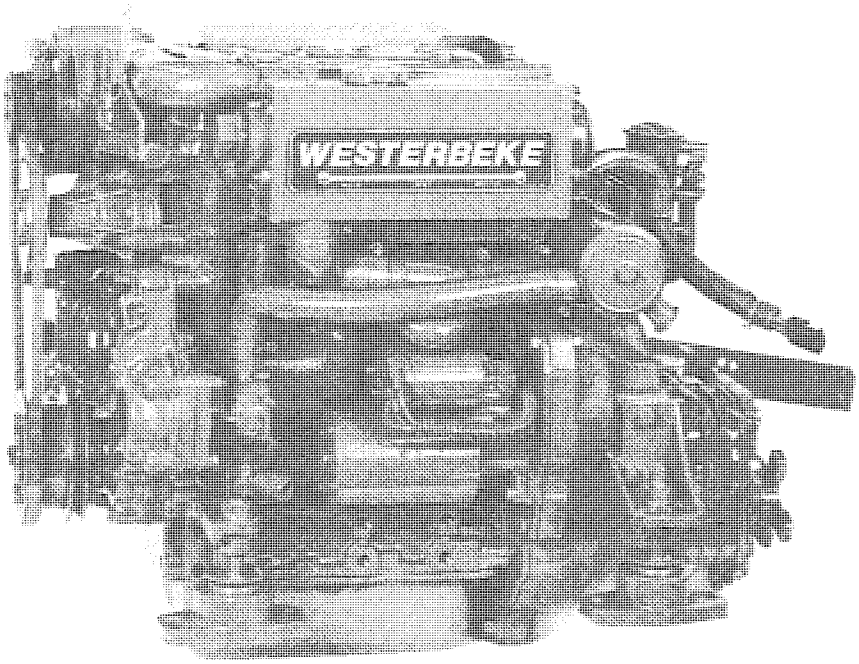

WESTERBEKE 21A

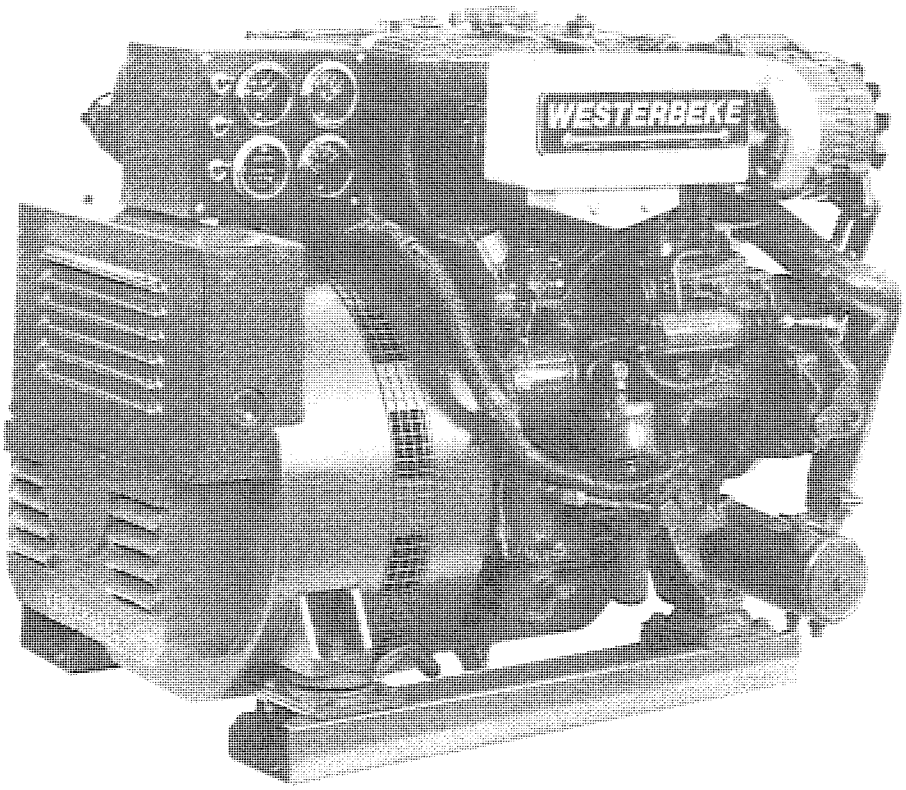

BTD-8KW GENERATOR

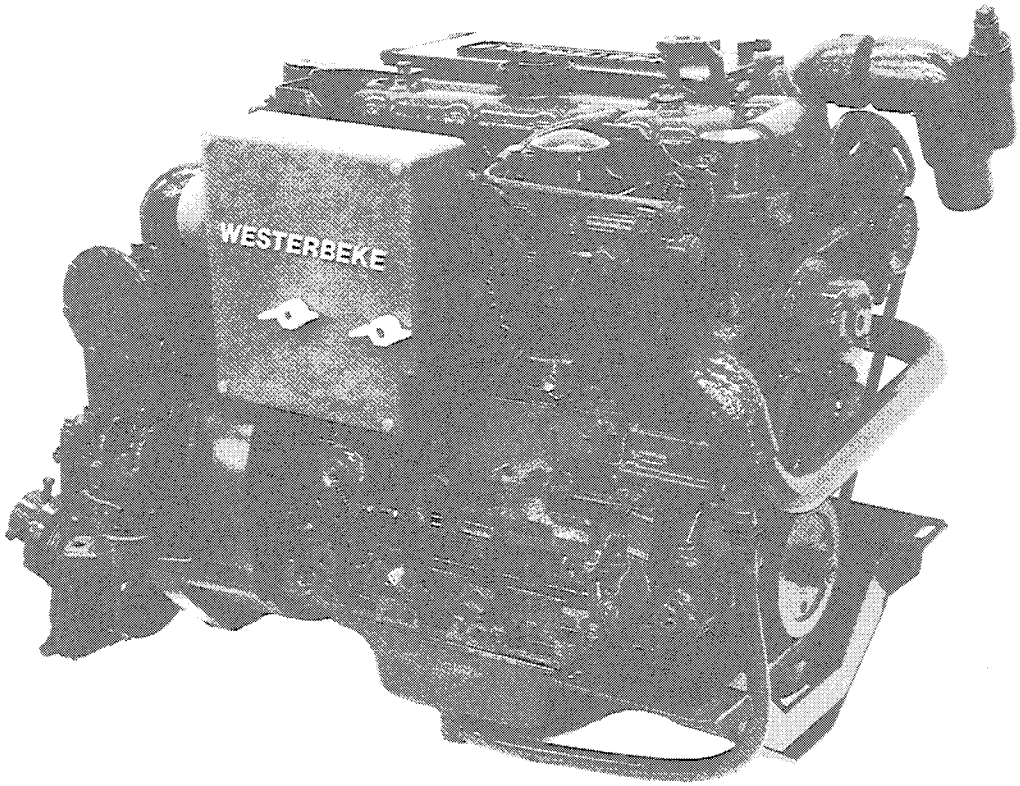

WESTERBEKE 27

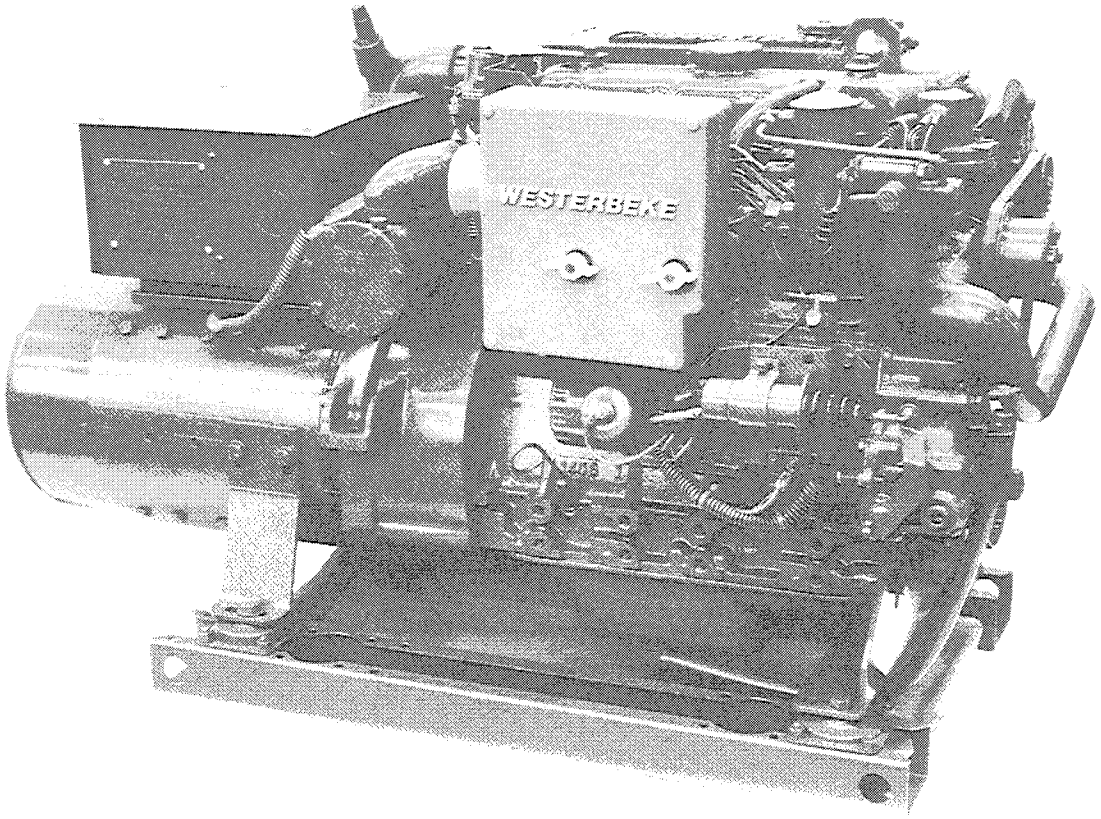

WMD 11KW GENERATOR

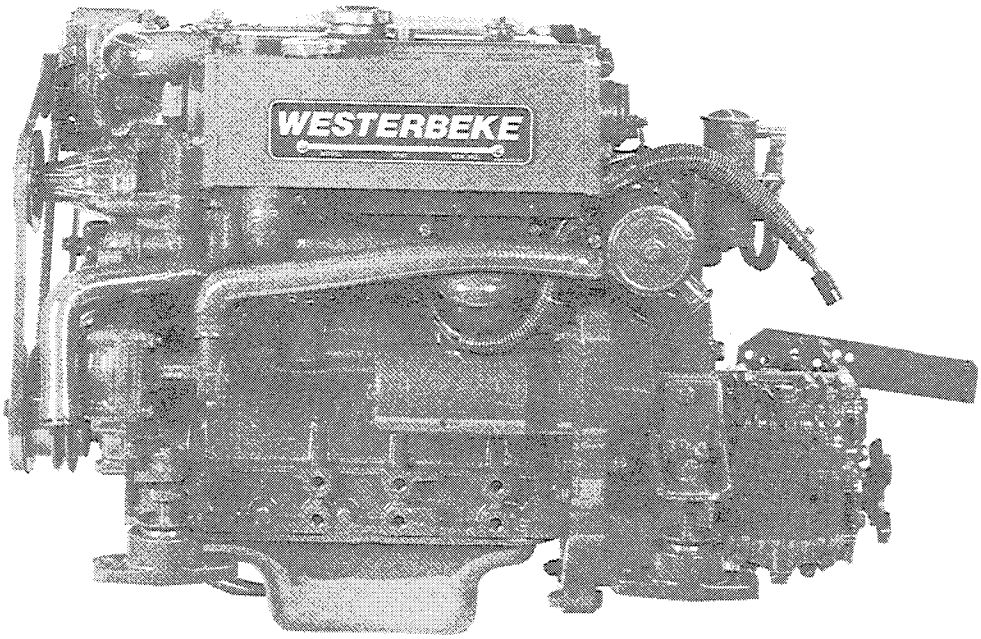

WESTERBEKE 27A

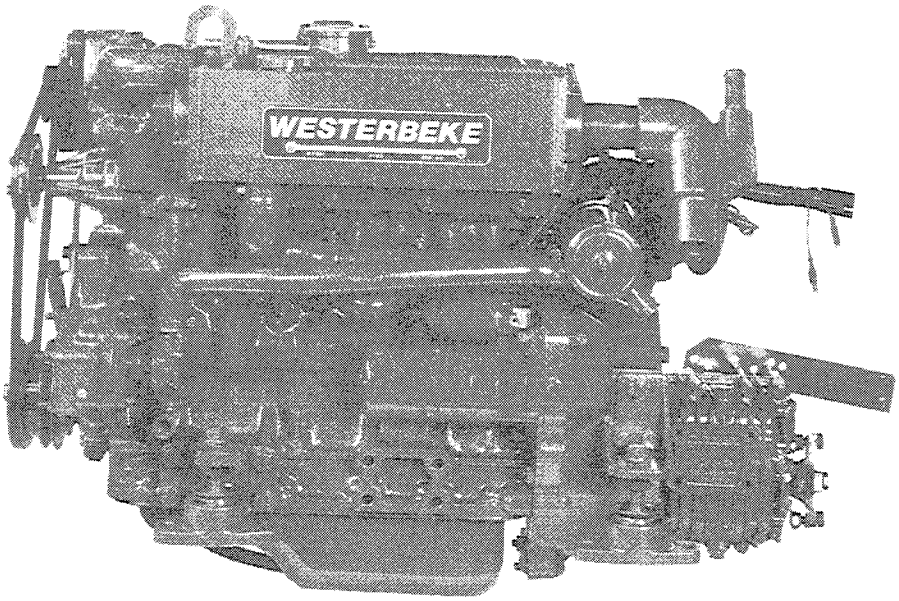

WESTERBEKE 33A

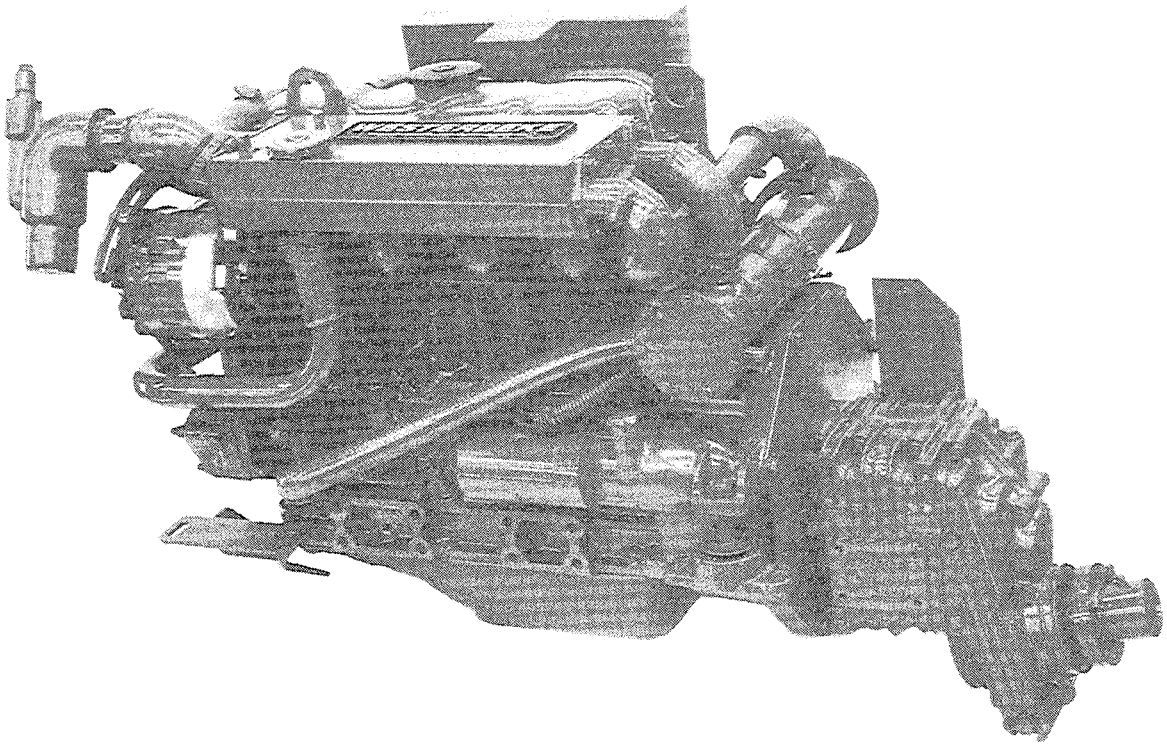

WESTERBEKE 33

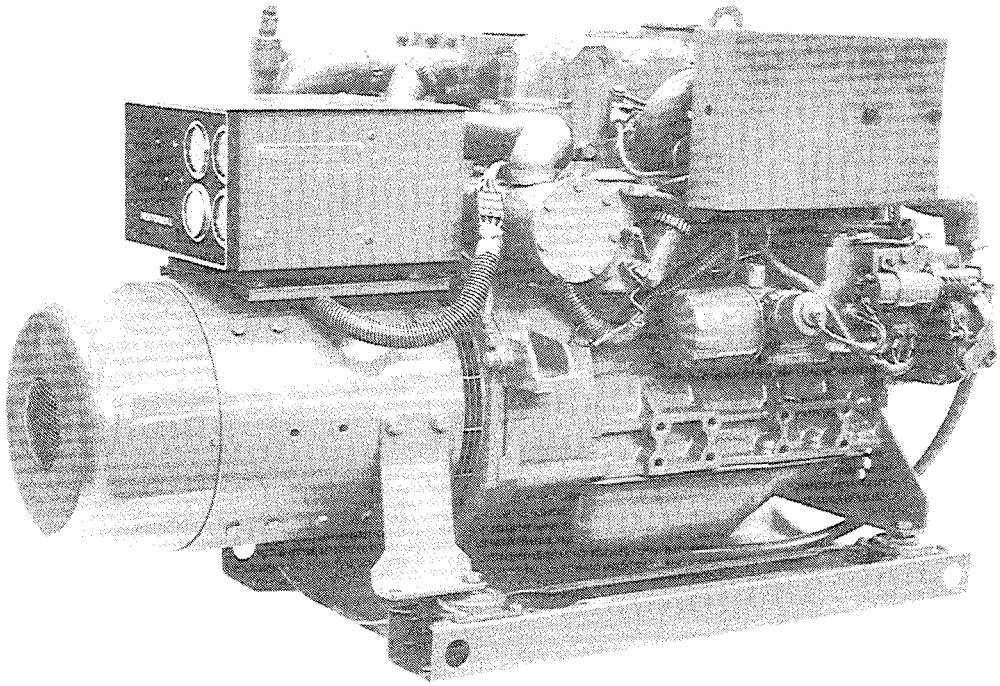

WMD 12.5KW GENERATOR

TABLE OF CONTENTS

200 WESTERBEKE 13 - CYLINDER BLOCK
202 WESTERBEKE 18-21-27-33 - CYLINDER BLOCK
206 WESTERBEKE 13 - CYLINDER HEAD
208 WESTERBEKE 18-21-27-33 - CYLINDER HEAD
212 WESTERBEKE 13 - TIMING COVER AND SUMP
214 WESTERBEKE 18-21-27-33 - TIMING COVER AND SUMP
218 WESTERBEKE 13-18-21-27-33 - CRANKSHAFT AND PISTONS
222 WESTERBEKE 13-18-21-27-33 - CAMSHAFT AND ROCKER SHAFT
226 WESTERBEKE 13-18-21-27-33 - LUBE OIL PUMP
230 WESTERBEKE 13-18-21-27-33 - INTAKE MANIFOLD AND SILENCER
234 WESTERBEKE EXTRUDED EXHAUST MANIFOLD (2 PASS)
238 WESTERBEKE 13-21-27-33 - COOLING SYSTEM
242 WESTERBEKE 13-21-27-33 - FLOWCONTROLLER
244 WESTERBEKE 13-21-27-33 - WATER INJECTED EXHAUST
246 WESTERBEKE 13A - COOLING SYSTEM
250 WESTERBEKE BC-4.4KW GENERATOR - COOLING SYSTEM
254 WESTERBEKE 18-21A-27A-33A - COOLING SYSTEM
258 WESTERBEKE BC-6KW GENERATOR - COOLING SYSTEM
262 WESTERBEKE BT-8KW GENERATOR - COOLING SYSTEM
266 WESTERBEKE 13-18-21-27-33 - FRESH WATER PUMP
270 WESTERBEKE 13-21-27-33 - SEA WATER PUMP NUMBER 24143
272 WESTERBEKE 13-18-21-27-33 - SEA WATER PUMP NUMBER 33636
274 WESTERBEKE 13 - GOVERNOR
276 WESTERBEKE 18-21-27-33 - GOVERNOR
278 WESTERBEKE 13-18-21-27-33 - IDLE STOP ASSEMBLY
280 WESTERBEKE 4.4-6-7.7-8-11-12.5KW - FUEL SOLENOID
282 WESTERBEKE 13 - FUEL SYSTEM
286 WESTERBEKE 21-27-33 - FUEL SYSTEM
290 WESTERBEKE 13A - BC-4.4KW - FUEL SYSTEM
294 WESTERBEKE 18-21A-27A-33A - FUEL SYSTEM
298 WESTERBEKE BC-6KW - BT-8KW - FUEL SYSTEM
302 WESTERBEKE 13-18-21-27-33 - FUEL INJECTOR
304 WESTERBEKE 13-21-27-33 - BACK END - MARINE MOUNTING SYSTEM
308 WESTERBEKE 13A-18-21A-27A-33A - BACK END - MOUNTING SYSTEM
312 WESTERBEKE 13-21-27-33 - TRANSMISSION - COUPLING
314 WESTERBEKE SHIFT CONNECTION ON HBW TRANSMISSIONS
316 WESTERBEKE 13-21-27-33 - ELECTRICAL SYSTEM
318 WESTERBEKE 13A-18-21A-27A-33A - ELECTRICAL SYSTEM
320 WESTERBEKE 4.4-7.7-8-11-12.5KW ELECTRICAL SYSTEM
322 WESTERBEKE BC-4.4KW - BC-6KW - BT-8KW - ELECTRICAL SYSTEM
326 WESTERBEKE MARINE INSTRUMENT PANEL
328 WESTERBEKE GENERATOR CONTROL PANEL
330 WESTERBEKE BC-4.4KW - BC-6KW - GENERATOR CONTROL PANEL
332 WESTERBEKE BT-8KW - GENERATOR CONTROL PANEL
334 WESTERBEKE 13-18-21-27-33 - ALTERNATOR
336 WESTERBEKE 13-21-27-33 - STARTER MOTOR
338 WESTERBEKE BC-4.4KW - BC-6KW - GENERATOR - BACK END - MOUNT
342 WESTERBEKE BC-4.4KW - BC-6KW - GENERATOR AC OUTPUT
344 WESTERBEKE BT-8KW - GENERATOR - BACK END - MOUNTING SYSTEM
348 WESTERBEKE BT-8KW - GENERATOR AC OUTPUT
350 WESTERBEKE 4.4-7.7-11-12.5KW - GENERATOR MOUNTING SYSTEM
352 WESTERBEKE 4.4-6-7.7-8-11-12.5KW - GENERATOR 2 OR 4 WIRE 60HZ
358 WESTERBEKE 4.4-7.7-11-12.5KW - GENERATOR 3 WIRE 60HZ
362 WESTERBEKE GENERATOR BELT GUARD
364 WESTERBEKE 13-18-21-27-33 - MISCELLANEOUS

WESTERBEKE 13 - CYLINDER BLOCK

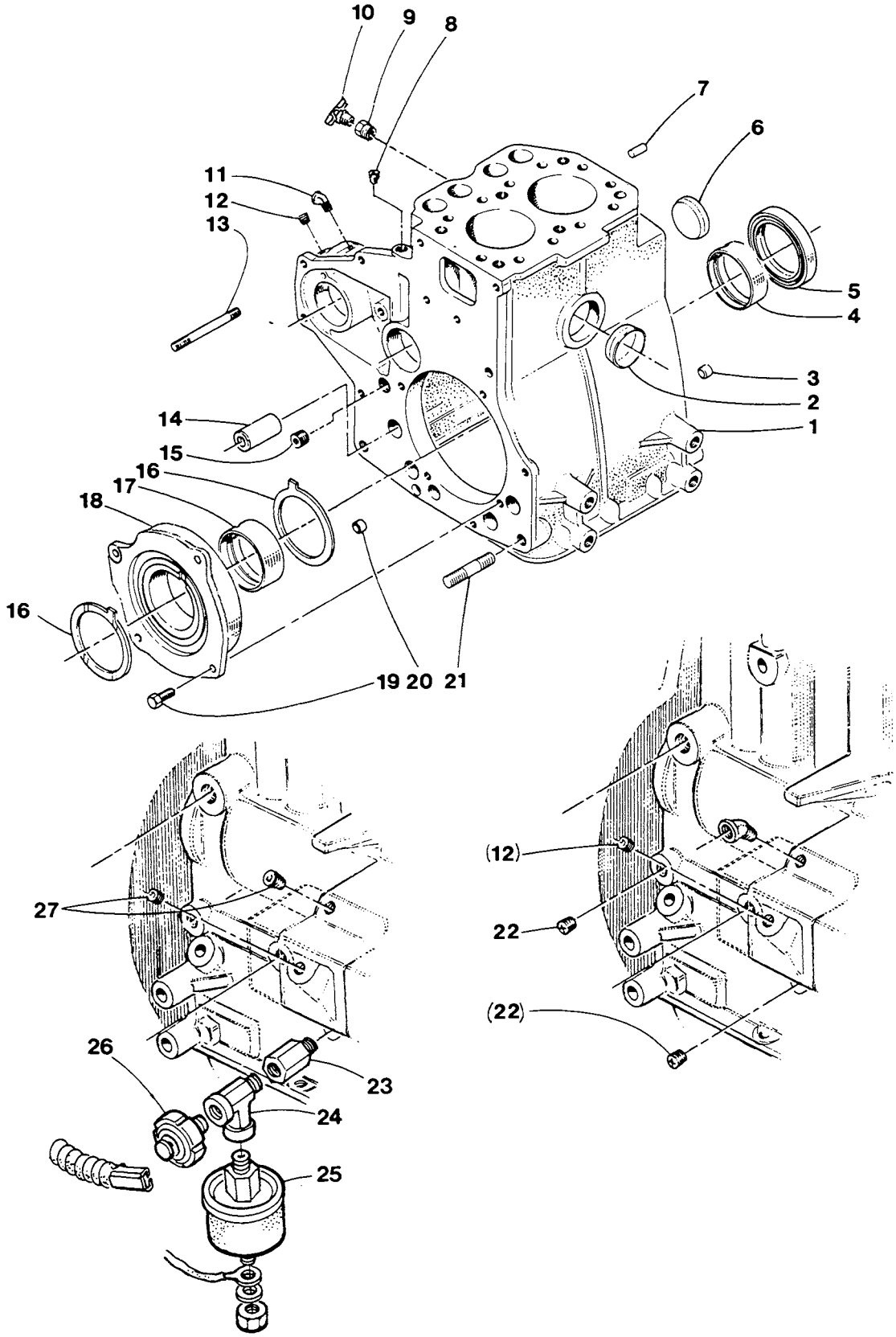

WESTERBEKE 13 - CYLINDER BLOCK

REF	PN	NAME	REMARKS	QUAN
1- 1	34931	BLOCK	ASSEMBLY-GOVERNOR SET FOR GENSET	1
1- 2	35386	BLOCK	ASSEMBLY-PROPULSION	1
1- 3	30335	BLOCK	BARE	1
2	33657	PLUG	EXPANSION-40	2
3	30708	DOWEL	TUBULAR 10X9	1
4- 1	30354	BEARING	CRANKSHAFT-STD	1
4- 2	30355	BEARING	CRANKSHAFT-0.25	1
4- 3	30356	BEARING	CRANKSHAFT-0.50	1
4- 4	30357	BEARING	CRANKSHAFT-0.75	1
5	30300	SEAL	OIL	1
6	30286	PLUG	EXPANSION-40	1
7	30272	DOWEL		1
8	30204	CONNECTOR	OIL LINE	1
9	24752	BUSHING	1/4BSPT TO 1/8NPT	1
10	11471	PETCOCK	BLOCK DRAIN	1
11- 1	24844	ADAPTER	1/8BSPT TO 1/8NPT-W13	2
11- 2	15122	ELBOW	STREET 1/8NPT 45 DEGREE-W13	2
12	30711	PLUG	1/8BSPT SOCKET HEAD	1
13	32016	STUD	M8 X 75 DIN 939	2
14	30318	SHAFT	GOVERNOR GEAR	1
15	30206	PLUG	1/4BSPT SOCKET HEAD WITH HOLE	1
16	30301	BEARING	CRANKSHAFT THRUST	2
17- 1	30354	BEARING	CRANKSHAFT-STD	1
17- 2	30355	BEARING	CRANKSHAFT-0.25	1
17- 3	30356	BEARING	CRANKSHAFT-0.50	1
17- 4	30357	BEARING	CRANKSHAFT-0.75	1
18	30344	HOUSING	WITH STD BEARING	1
19	17196	CAPSCREW	M8 X 20 DIN 933	4
20	30706	DOWEL	TUBULAR 8X9	2
21	31280	STUD	M12 X 1.25 X 60 7T	2
22	30239	PLUG	1/16	2
23	24844	ADAPTER	1/8BSPT TO 1/8NPT-W13A	1
24	35145	TEE	1/8NPT STREET-W13A	1
25	24132	SENDER	OIL PRESSURE	1
26- 1	34761	SWITCH	OIL PRESSURE-PROPULSION ALARM	1
26- 2	33348	SWITCH	OIL PRESSURE-GENSET SAFETY	1
27	30711	PLUG	1/8BSPT SOCKET HEAD-W13A	2

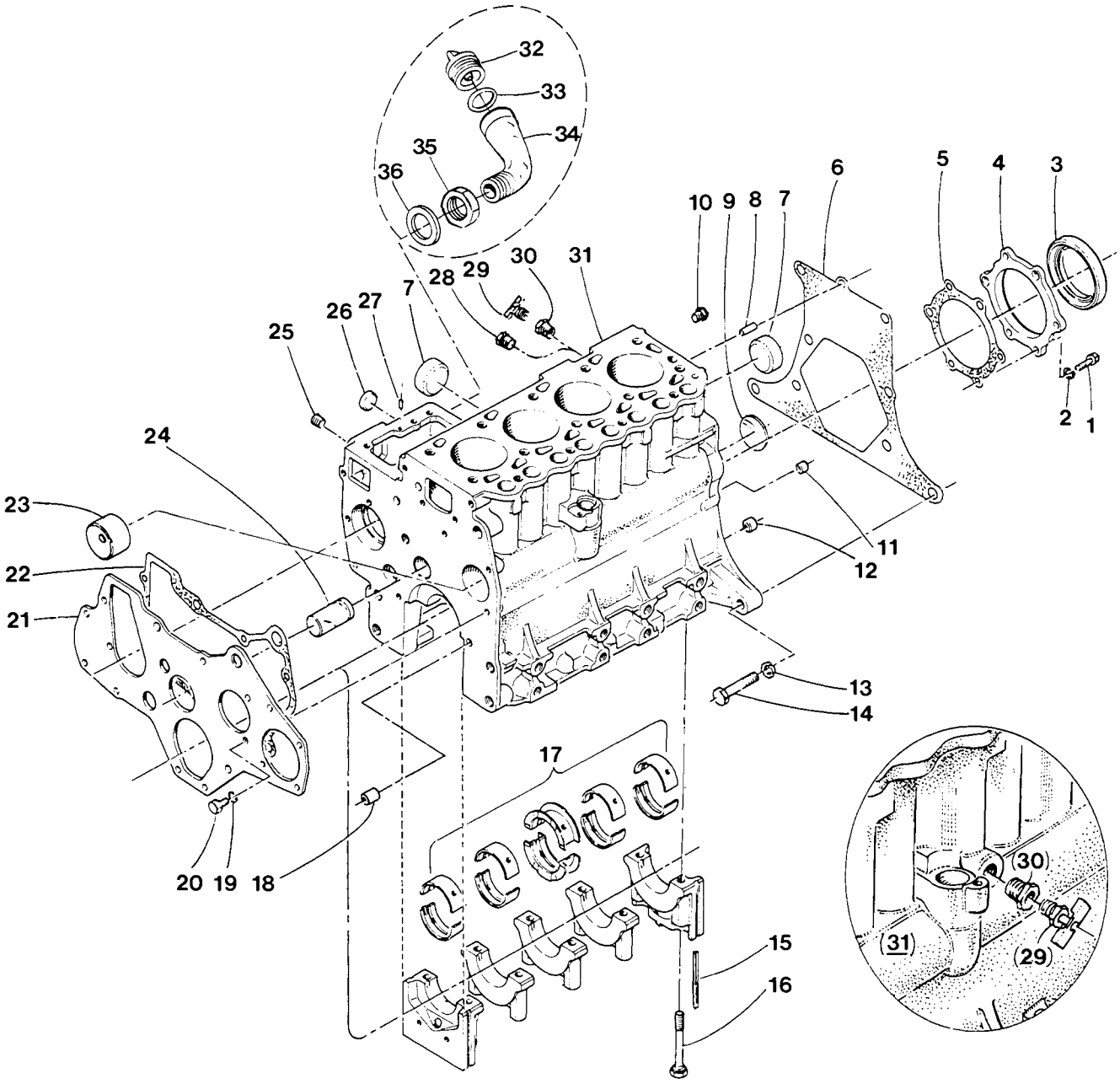
32
33
34
35
36
10
9
8
7
6
5
4
3
30
31
29
28
7
27
26
25
2
1
24
23
22
21
11
12
13
14
17
20
19
18
15
16
(30)
(31)
(29)

WESTERBEKE 18-21-27-33 - CYLINDER BLOCK

REF	PN	NAME	REMARKS	QUAN
1- 1	13630	CAPSCREW	M8 X 25 DIN 933-W18-21-27	6
1- 2	13630	CAPSCREW	M8 X 25 DIN 933-W33	7
2- 1	31786	LOCKWASHER	M8 DIN 127-W18-21-27	6
2- 2	31786	LOCKWASHER	M8 DIN 127-W33	7
3	30395	SEAL	OIL	1
4- 1	30489	HOUSING	OIL SEAL-W18-21-27	1
4- 2	30393	HOUSING	OIL SEAL-W33	1
5- 1	30490	GASKET	OIL SEAL HOUSING-W18-21-27	1
5- 2	30394	GASKET	OIL SEAL HOUSING-W33	1
6- 1	30491	GASKET	BACKPLATE-W18-21-27	1
6- 2	30400	GASKET	BACKPLATE-W33	1
7- 1	30717	PLUG	EXPANSION-45-W18-21	2
7- 2	30717	PLUG	EXPANSION-45-W27-33	3
8	30272	DOWEL	W18-21-27	1
9- 1	30286	PLUG	EXPANSION-40-W18-21-27	1
9- 2	30287	PLUG	EXPANSION-45-W33	1
10	30294	PLUG	SOCKET HEAD-W33	2
11	30706	DOWEL	TUBULAR 8X9	2
12- 1	30709	DOWEL	TUBULAR 12X9-W18-21-27	1
12- 2	30709	DOWEL	TUBULAR 12X9-W33	2
15	30390	SEAL	SIDE	4
16- 1	30389	BOLT	MAIN BEARING CAP-W18-21	8
16- 2	30389	BOLT	MAIN BEARING CAP-W27-33	10
17- 1	30479	BEARING	SET-MAIN-W18-21-STD	1
17- 2	30480	BEARING	SET-MAIN-W18-21-0.25	1
17- 3	30481	BEARING	SET-MAIN-W18-21-0.50	1
17- 4	30482	BEARING	SET-MAIN-W18-21-0.75	1
17- 5	30483	BEARING	SET-MAIN-W27-STD	1
17- 6	30484	BEARING	SET-MAIN-W27-0.25	1
17- 7	30485	BEARING	SET-MAIN-W27-0.50	1
17- 8	30486	BEARING	SET-MAIN-W27-0.75	1
17- 9	30396	BEARING	SET-MAIN-W33-STD	1
17-10	30397	BEARING	SET-MAIN-W33-0.25	1
17-11	30398	BEARING	SET-MAIN-W33-0.50	1
17-12	30399	BEARING	SET-MAIN-W33-0.75	1
18	30707	DOWEL	TUBULAR 8X13	2
19	31786	LOCKWASHER	M8 DIN 127	3
20	16789	CAPSCREW	M8 X 16 DIN 933	3
21- 1	30492	PLATE	FRONT-W18-21-27	1
21- 2	30401	PLATE	FRONT-W33	1
22- 1	30493	GASKET	FRONT PLATE TO BLOCK-W18-21-27	1
22- 2	30402	GASKET	FRONT PLATE TO BLOCK-W33	1
23- 1	30488	BUSHING	CAMSHAFT-W18-21-27	1
23- 2	30392	BUSHING	CAMSHAFT-W33	1
24	30487	SHAFT	IDLER GEAR	1
25- 1	30712	PLUG	1/4-W18-21-27	3
25- 2	30712	PLUG	1/4-W33	1
26- 1	24373	PLUG	EXPANSION-W18-21-27	2
26- 2	24349	PLUG	EXPANSION-W33	1
27	30224	DOWEL		2
28	30711	PLUG	1/8-W33	1

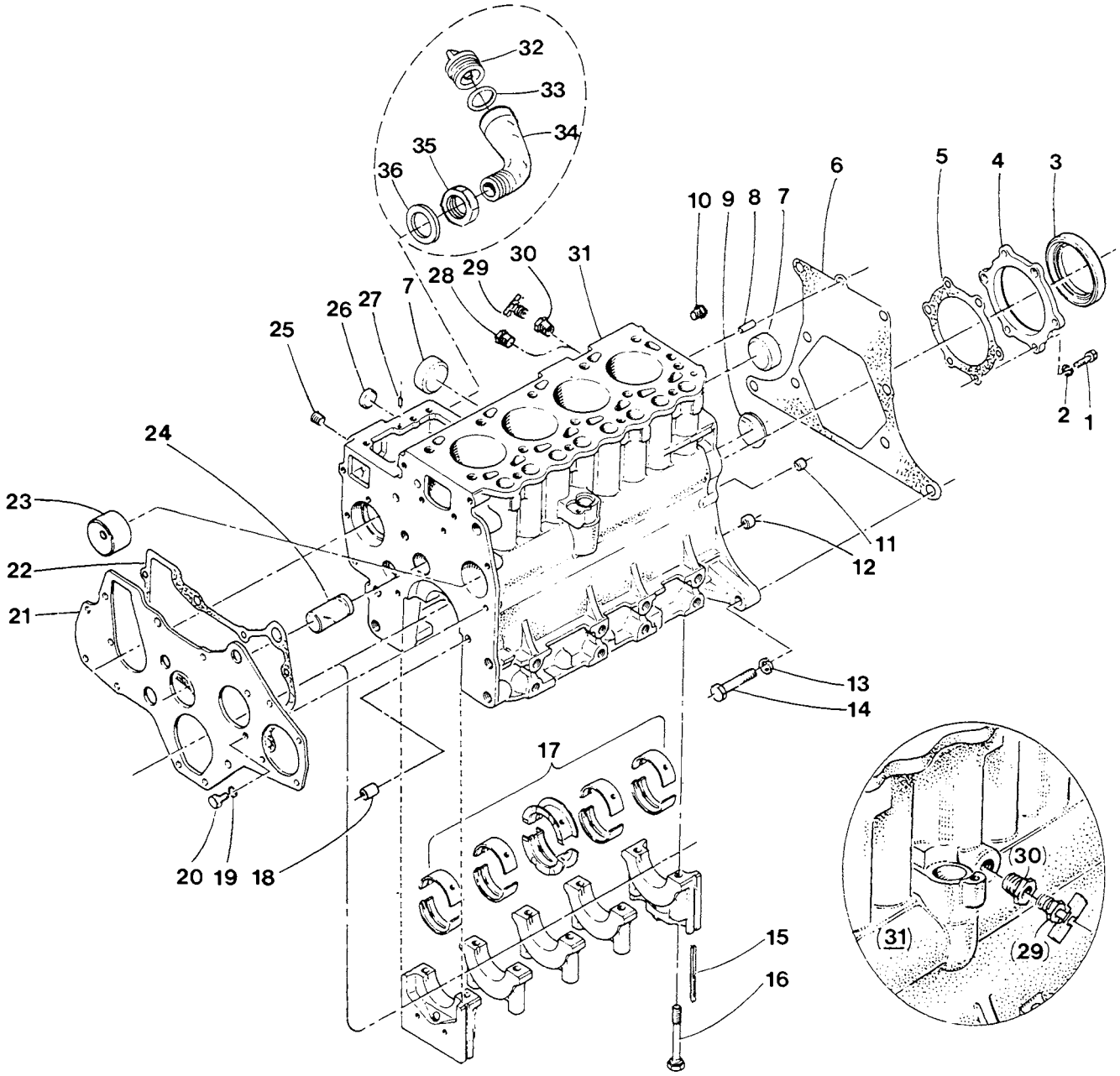
32
33
34
35
36
10
9
8
7
6
5
4
3
30
31
29
28
7
27
26
25
2
1
24
23
22
21
11
12
13
14
17
20
19
18
15
16
30
31
29

WESTERBEKE 18-21-27-33 - CYLINDER BLOCK

REF	PN	NAME	REMARKS	QUAN
29	11471	PETCOCK		1
30	24752	BUSHING	1/4BSPT TO 1/8NPT	1
31- 1	35392	BLOCK	ASSEMBLY-W21	1
31- 2	34938	BLOCK	ASSEMBLY-8KW	1
31- 3	30502	BLOCK	BARE-W21-TO S/N 27902	1
31- 4	34675	BLOCK	BARE-W21-SIDE OIL FILL FROM S/N 27903	1
31- 5	35390	BLOCK	ASSEMBLY-W18	1
31- 6	34934	BLOCK	ASSEMBLY-6KW	1
31- 7	33793	BLOCK	BARE-6KW TO S/N 27075	1
31- 8	34674	BLOCK	BARE-6KW SIDE OIL FILL FROM S/N 27076	1
31- 9	34977	BLOCK	ASSEMBLY-W27	1
31-10	35398	BLOCK	ASSEMBLY-11KW	1
31-11	30501	BLOCK	BARE-W27	1
31-12	34979	BLOCK	ASSEMBLY-W33	1
31-13	35401	BLOCK	ASSEMBLY-12.5KW	1
31-14	30388	BLOCK	BARE-W33	1
32	33126	CAP	OIL FILLER WITH O-RING	1
33	33123	O-RING	OIL FILLER CAP	1
34	34670	ELBOW	OIL FILLER TO BLOCK	1
35	34669	NUT	OIL FILLER ELBOW	1
36	34667	WASHER	OIL FILLER ELBOW	1

WESTERBEKE 13 - CYLINDER HEAD

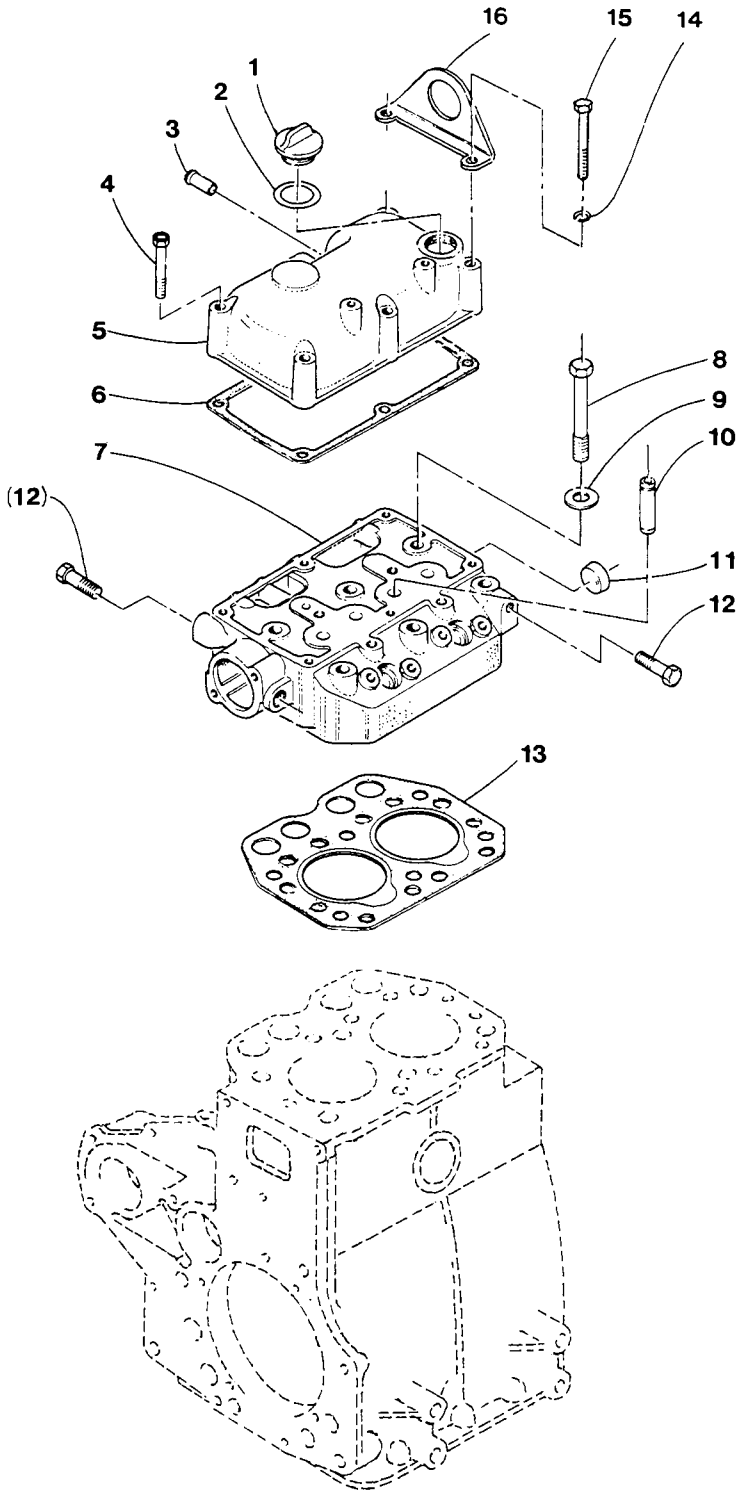

WESTERBEKE 13 - CYLINDER HEAD

REF	PN	NAME	REMARKS	QUAN
1	30298	CAP	OIL FILLER WITH GASKET	1
2	30194	GASKET	OIL FILLER CAP	1
3	30219	TUBE		1
4	31811	CAPSCREW	M8 X 55 DIN 931	4
5	30343	COVER	ROCKER	1
6	30342	GASKET	ROCKER COVER	1
7	30341	HEAD	CYLINDER WITH PLUG AND VALVE GUIDES	1
8	30345	BOLT	CYLINDER HEAD	6
9	30243	WASHER	CYLINDER HEAD BOLT	6
10	30340	GUIDE	VALVE	4
11	24373	PLUG	EXPANSION-25	1
12	24953	CAPSCREW	M10 X 1.25 X 35 DIN 961	2
13	30339	GASKET	HEAD	1
14	31786	LOCKWASHER	M8 DIN 127	2
15	31225	CAPSCREW	M8 X 60 DIN 931	2
16	31171	EYE	LIFTING	1

WESTERBEKE 18-21-27-33 - CYLINDER HEAD

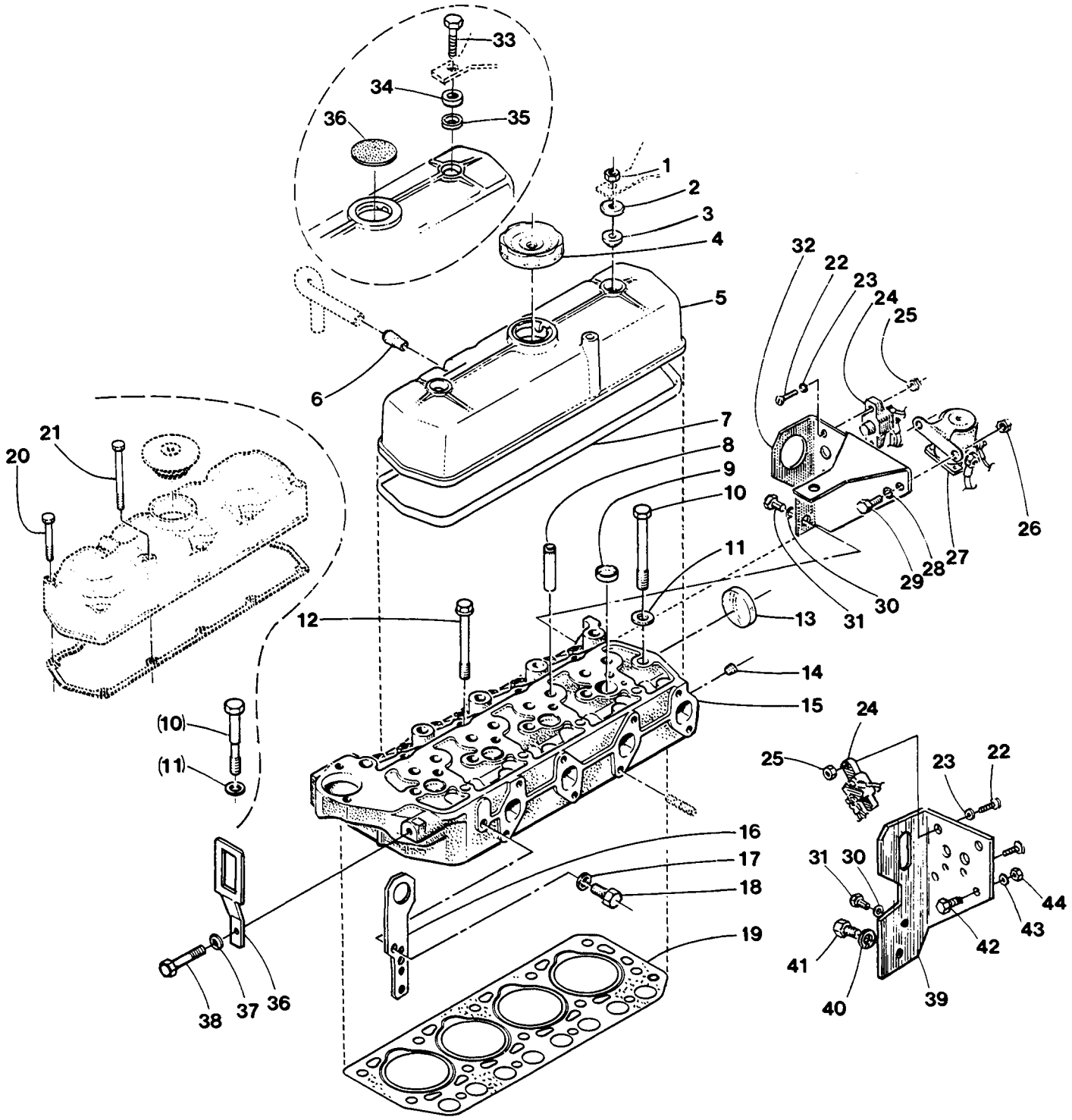

WESTERBEKE 18-21-27-33 - CYLINDER HEAD

REF	PN	NAME	REMARKS	QUAN
1	018242	NUT	M 8 DIN 934 W21-27	2
2	030517	WASHER	W21-27	2
3	030780	SEAL	OIL-ROCKER COVER STUD W21-27	2
4-1	030237	CAP	OIL FILL TOP W18-21-27	1
4-2	030229	CAP	OIL FILL W33	1
5-1	030513	COVER	ROCKER INCL REF 6 W18-21 TOP OIL FILL	1
5-2	034676	COVER	ROCKER INCL REF 6 W18-21 SIDE OIL FILL	1
5-3	030514	COVER	ROCKER INCL REF 6 W27	1
5-4	030406	COVER	ROCKER INCL REF 6 W33	1
6-1	030219	CONNECTOR	BREATHER HOSE TO COVER W18-21-27	1
6-2	030223	CONNECTOR	BREATHER HOSE TO COVER W33	1
7-1	030515	GASKET	ROCKER COVER W18-21	1
7-2	030516	GASKET	ROCKER COVER W27	1
7-3	030407	GASKET	ROCKER COVER W33	1
8-1	030506	GUIDE	VALVE W18-21	6
8-2	030506	GUIDE	VALVE W27	8
8-3	030404	GUIDE	VALVE W33	8
9-1	024373	PLUG	EXPANSION-25 W18-21-33	3
9-2	024373	PLUG	EXPANSION-25 W27	4
10-1	030512	BOLT	CYLINDER HEAD-LONG W18-21	8
10-2	030512	BOLT	CYLINDER HEAD-LONG W27	10
10-3	030215	BOLT	CYLINDER HEAD-LONG W33	14
11-1	030243	WASHER	HEAD BOLT W18-21	8
11-2	030243	WASHER	HEAD BOLT W27	10
11-3	030197	WASHER	HEAD BOLT W33	14
12-1	030383	BOLT	CYLINDER HEAD-SHORT W18-21	3
12-2	030383	BOLT	CYLINDER HEAD-SHORT W27	4
12-3	030271	BOLT	CYLINDER HEAD-SHORT W33	2
13-1	030717	PLUG	EXPANSION-45 W18-21-27	1
13-2	033657	PLUG	EXPANSION-40 W33	1
14	030711	PLUG	1/8	1
15-1	033794	HEAD	CYLINDER INCL REF 8-9-13 W18 TO SN 31605	1
15-2	037286	HEAD	CYLINDER INCL REF 8-9-13 W18 FR SN 31606	1
15-3	030504	HEAD	CYLINDER-NLA USE 37287 & 37280 CAMSHAFT	1
15-4	037287	HEAD	CYLINDER INCL REF 8-9-13 W21 FR SN 49607	1
15-5	030505	HEAD	CYLINDER INCL REF 8-9-13 W27 TO SN 21804	1
15-6	037288	HEAD	CYLINDER INCL REF 8-9-13 W27 FR SN 21805	1
15-7	030403	HEAD	CYLINDER INCL REF 8-9-13 W33 TO SN 8038	1
15-8	037289	HEAD	CYLINDER INCL REF 8-9-13 W33 FR SN 8039	1
15-9		NOTE	CAN USE NEW HEAD ON OLD W/NEW CAMSHAFT	
16-1	030131	EYE	LIFTING W21-27	1
16-2	030131	EYE	LIFTING W33	2
17	019262	LOCKWASHER	M10 DIN 127	1
18-1	024952	CAPSCREW	M10 X 1.25 X 20 DIN 961	1
18-2	024958	CAPSCREW	M12 X 1.25 X 20 DIN 961 W33	1
19-1	033786	GASKET	CYLINDER HEAD W18	1
19-2	030509	GASKET	CYLINDER HEAD W21	1
19-3	030507	GASKET	CYLINDER HEAD W27	1
19-4	030405	GASKET	CYLINDER HEAD W33	1

WESTERBEKE 18-21-27-33 - CYLINDER HEAD

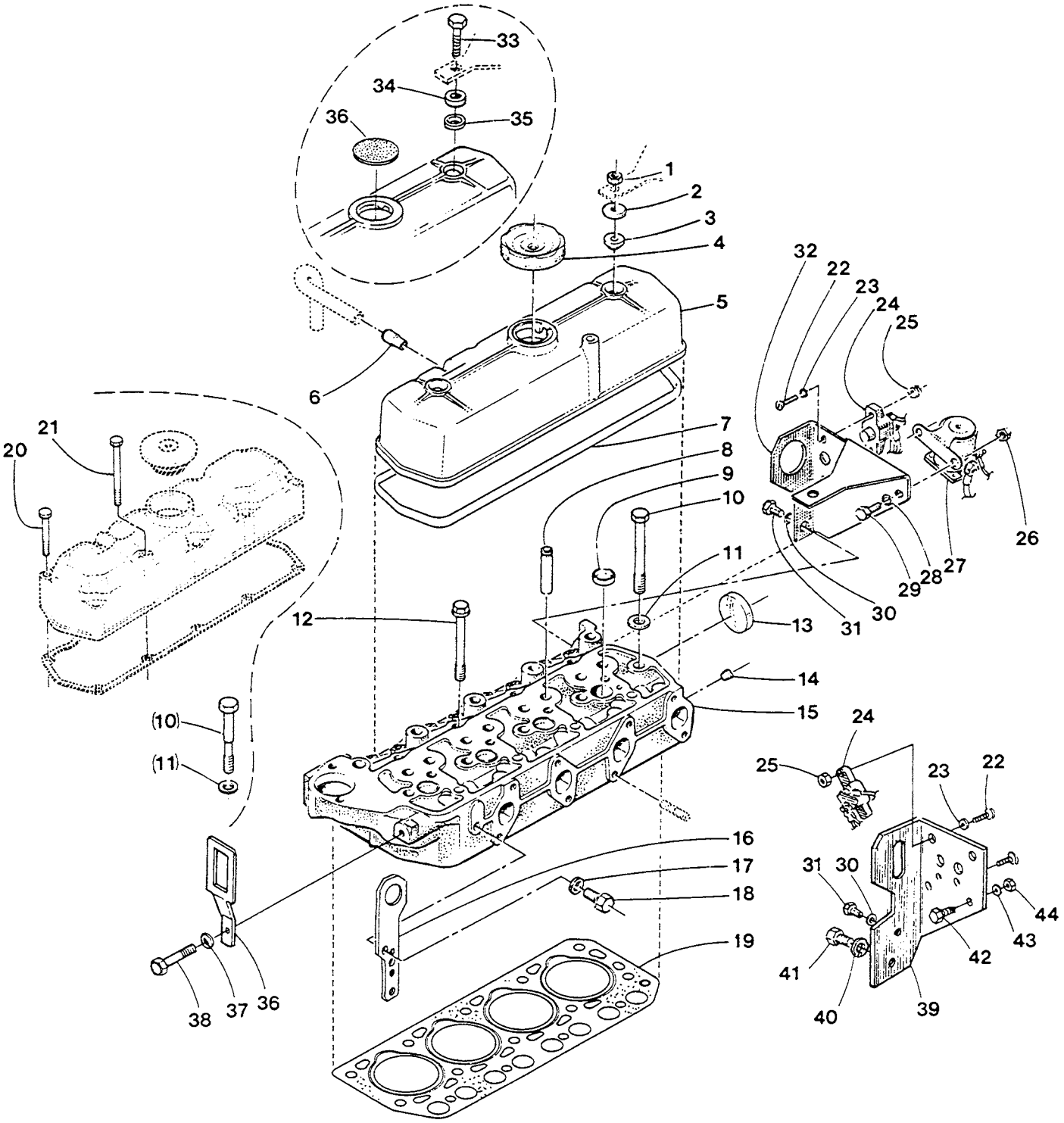

WESTERBEKE 18-21-27-33 - CYLINDER HEAD

REF	PN	NAME	REMARKS	QUAN
20	31812	CAPSCREW	M8 X 65 DIN 931-W33	9
21	31816	CAPSCREW	M8 X 100 DIN 931-W33	1
22	31866	SCREW	8-32 X 7/8	2
23	31844	LOCKWASHER	8	2
24	24683	BREAKER	CIRCUIT-20 AMP	1
25	31842	NUT	8-32	2
26	31750	NUT	1/4NC	2
27	24639	SOLENOID	PRE-HEAT	1
28	31752	LOCKWASHER	1/4	2
29	31501	CAPSCREW	1/4NC X 1/2	2
30	19262	LOCKWASHER	M10 DIN 127	1
31- 1	24951	CAPSCREW	M10 X 1.25 X 20 DIN 961	1
31- 2	24958	CAPSCREW	M12 X 1.25 X 20 DIN 961-W33	1
32	24849	BRACKET	CIRCUIT BREAKER & SOLENOID-W21-27	1
33- 1	13630	CAPSCREW	M8 X 25 DIN 933 COVER 34676	1
33- 2	34672	CAPSCREW	M8 X 11 DIN 933 COVER 34676	1
34	34616	SPACER	SOLENOID BRACKET	1
35	30289	SEAL	OIL-ROCKER COVER CAPSCREW	2
36	34652	EYE	LIFTING-W18-21A-27A-33A	1
37	31786	LOCKWASHER	M8 DIN 127	1
38	16789	CAPSCREW	M8 X 16 DIN 933	1
39- 1	34418	BRACKET	CIRCUIT BREAKER & SOLENOID-PROPULSION	1
39- 2	30131	EYE	LIFTING-GENSET	1
40	31786	LOCKWASHER	M8 DIN 127	1
41	20650	CAPSCREW	M8 X 18 DIN 933	1
42	18804	CAPSCREW	M6 X 20 DIN 933	2
43	31783	LOCKWASHER	M6 DIN 127	2
44	15812	NUT	M6 DIN 934	2

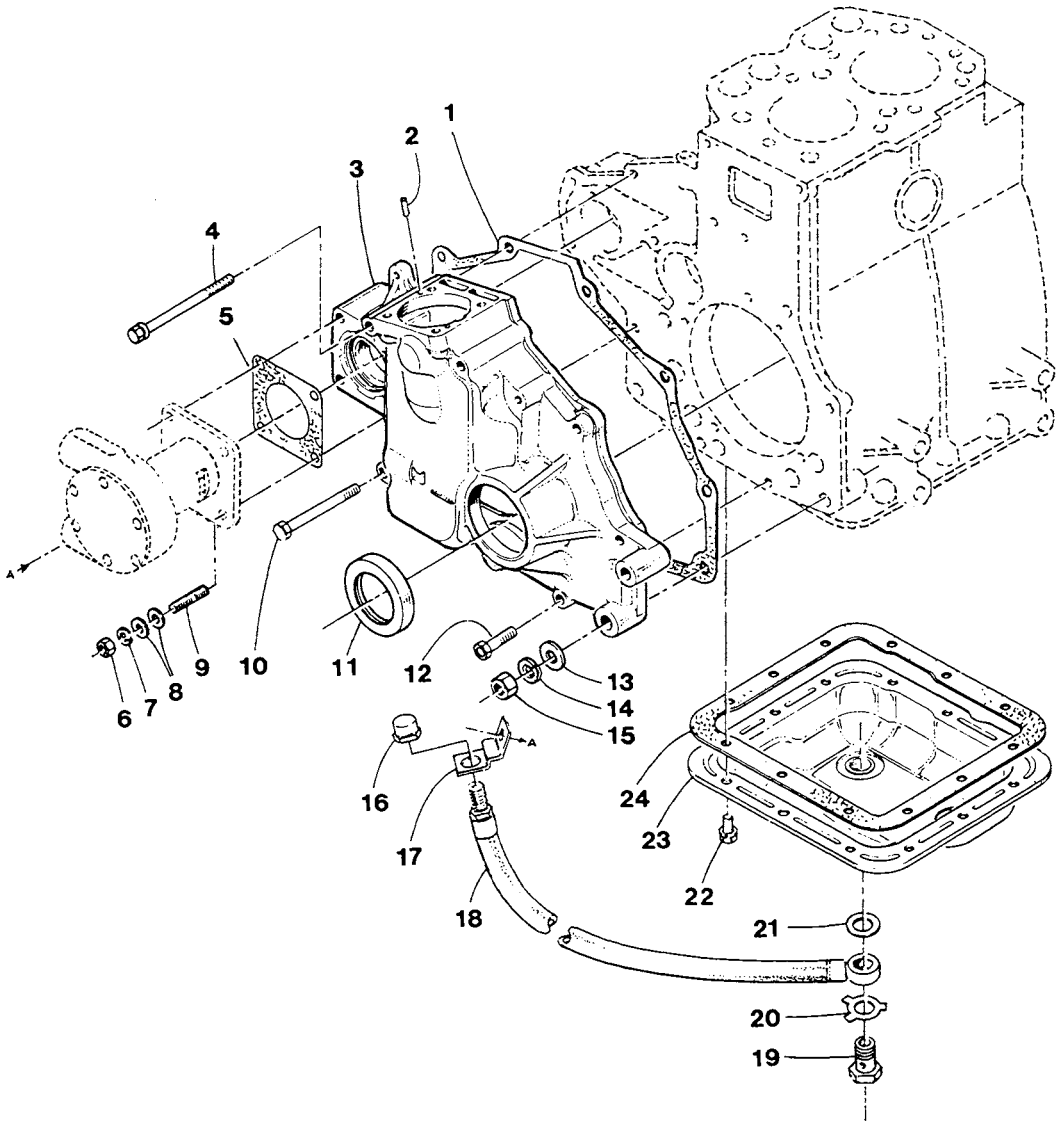
1
2
3
4
5
6
7
8
9
10
11
12
13
14
15
16
17
18
19
20
21
22
23
24
A
A

WESTERBEKE 13 - TIMING COVER AND SUMP

REF	PN	NAME	REMARKS	QUAN
1	30348	GASKET	TIMING CASE TO BLOCK	1
2	30224	DOWEL		2
3	30347	CASE	TIMING	1
4	31816	CAPSCREW	M8 X 100 DIN 931	1
5	30326	GASKET	TIMING CASE TO SEA WATER PUMP	1
6	18242	NUT	M8 DIN 934	4
7	31786	LOCKWASHER	M8 DIN 127	4
8	31787	WASHER	M8 DIN 125	4
9	15828	STUD	M8 X 22 DIN 939	4
10	31814	CAPSCREW	M8 X 85 DIN 931	2
11	30207	SEAL	OIL	1
12	31462	CAPSCREW	M8 X 35 DIN 931	4
13	31793	WASHER	M12 DIN 125	2
14	31792	LOCKWASHER	M12 DIN 127	2
15	24957	NUT	M12 X 1.25	2
16	24905	CAP	SUMP DRAIN HOSE	1
17	24922	BRACKET	SUMP DRAIN HOSE	1
18- 1	30846	HOSE	SUMP DRAIN	1
18- 2	34746	HOSE	SUMP DRAIN BC-4.4KW	1
19- 1	24782	BOLT	BANJO	1
19- 2		LOC-TITE	PST MUST BE USED	
20	24913	TABWASHER		1
21	24973	WASHER	BANJO	1
22- 1	16789	CAPSCREW	M8 X 16 DIN 933	12
22- 2	31786	LOCKWASHER	M8 DIN 127	12
23	30349	SUMP	OIL	1
24	30350	GASKET	SUMP TO BLOCK	1
25	30743	KIT	SUMP DRAIN HOSE-REF 16-21	1

WESTERBEKE 18-21-27-33 - TIMING COVER AND SUMP

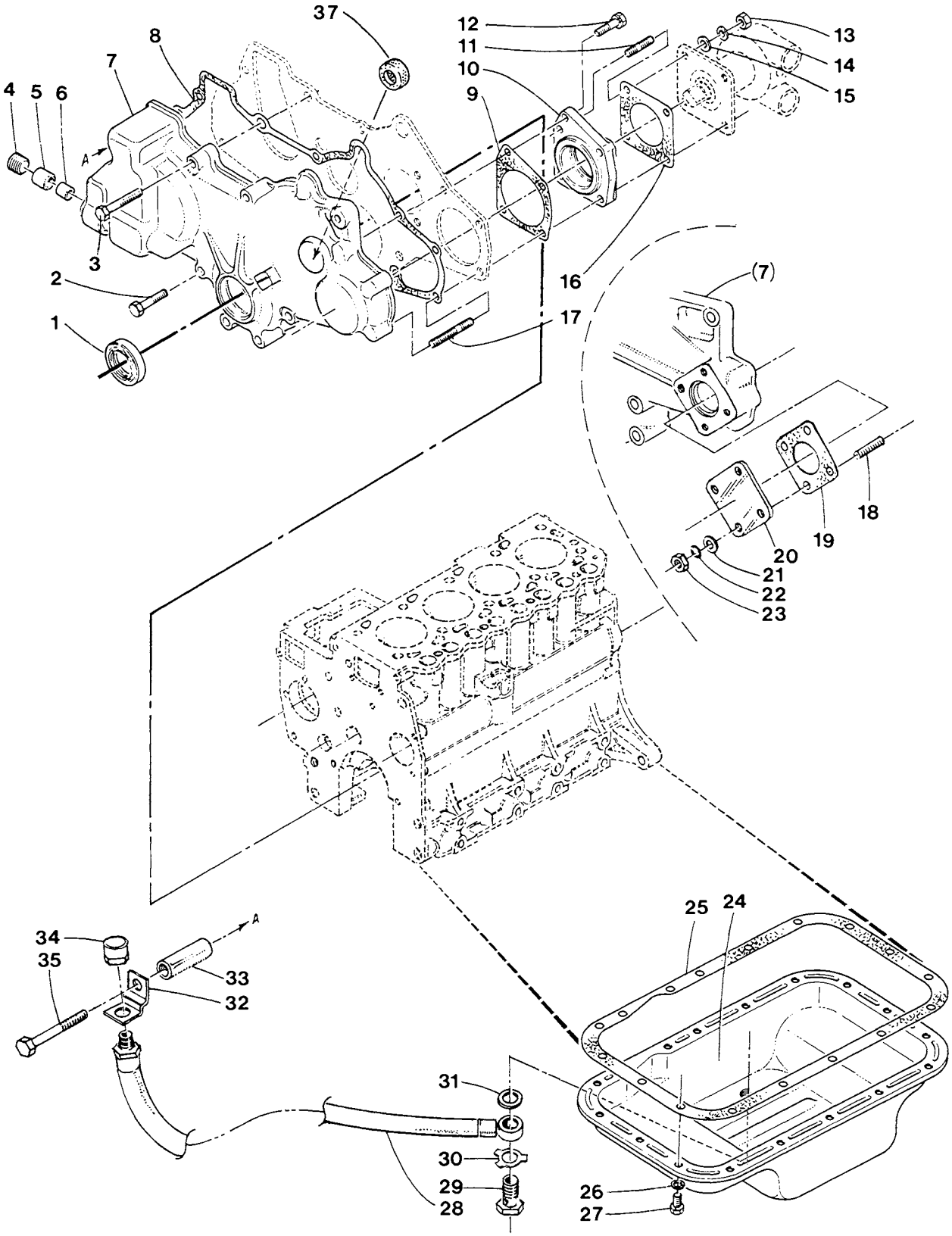

WESTERBEKE 18-21-27-33 - TIMING COVER AND SUMP

REF	PN	NAME	REMARKS	QUAN
1	30209	SEAL	OIL	1
2- 1	24948	CAPSCREW	M8 X 45 DIN 931-W18-21-27	8
2- 2	24948	CAPSCREW	M8 X 45 DIN 931-W33	10
3- 1	17196	CAPSCREW	M8 X 20 DIN 933-W18-21-27	2
3- 2	16789	CAPSCREW	M8 X 16 DIN 933-W33	2
3- 3	31786	LOCKWASHER	M8 DIN 127	2
4	30713	PLUG	1/2	1
5	30411	BEARING	NEEDLE	1
6	30410	BEARING	NEEDLE	1
7- 1	30494	COVER	TIMING-W18-21-27	1
7- 2	30409	COVER	TIMING-W33	1
8- 1	30495	GASKET	TIMING COVER-W18-21-27	1
8- 2	30408	GASKET	TIMING COVER-W33	1
9- 1	30589	GASKET	BEARING HOUSING-W18-21-27	1
9- 2	30470	GASKET	BEARING HOUSING-W33	1
10- 1	30588	HOUSING	BEARING-W18-21-27	1
10- 2	30469	HOUSING	BEARING-W33	1
11- 1	15830	STUD	M8 X 25 DIN 939-W18-21-27	1
11- 2	15828	STUD	M8 X 22 DIN 939-W33	2
12- 1	18811	CAPSCREW	M8 X 40 DIN 931-W18-21-27	1
12- 2	31786	LOCKWASHER	M8 DIN 127-W18-21-27	1
12- 3	13630	CAPSCREW	M8 X 25 DIN 933-W33	2
12- 4	31786	LOCKWASHER	M8 DIN 127-W33	2
13	18242	NUT	M8 DIN 934	4
14	31786	LOCKWASHER	M8 DIN 127	4
15	31787	WASHER	M8 DIN 125	4
16	30326	GASKET	WATER PUMP TO HOUSING	1
17- 1	31282	STUD	M8 X 45 DIN 939-W18-21-27	3
17- 2	31281	STUD	M8 X 40 DIN 939-W33	2
18	15828	STUD	M8 X 22 DIN 939-W33	4
19	30326	GASKET	W33	1
20	30325	COVER	W33	1
21	31787	WASHER	M8 DIN 127-W33	4
22	31786	LOCKWASHER	M8 DIN 127-W33	4
23	18242	NUT	M8 DIN 934-W33	4
24- 1	30500	SUMP	OIL-W21-BOTTOM DRAIN TO S/N 27902	1
24- 2	34673	SUMP	OIL-W21-SIDE DRAIN FROM S/N 27903	1
24- 3	30500	SUMP	OIL-6KW-BOTTOM DRAIN TO S/N 27075	1
24- 4	34673	SUMP	OIL-6KW-SIDE DRAIN FROM S/N 27076-W18	1
24- 5	30497	SUMP	OIL-W27	1
24- 6	30412	SUMP	OIL-W33	1
25- 1	30498	GASKET	OIL SUMP-W18-21	1
25- 2	30499	GASKET	OIL SUMP-W27	1
25- 3	30413	GASKET	OIL SUMP-W33	1
26- 1	31786	LOCKWASHER	M8 DIN 127-W18-21	15
26- 2	31786	LOCKWASHER	M8 DIN 127-W27	17
26- 3	31786	LOCKWASHER	M8 DIN 127-W33	18
27- 1	16789	CAPSCREW	M8 X 16 DIN 933-W18-21	15
27- 2	16789	CAPSCREW	M8 X 16 DIN 933-W27	17
27- 3	16789	CAPSCREW	M8 X 16 DIN 933-W33	18

WESTERBEKE 18-21-27-33 - TIMING COVER AND SUMP

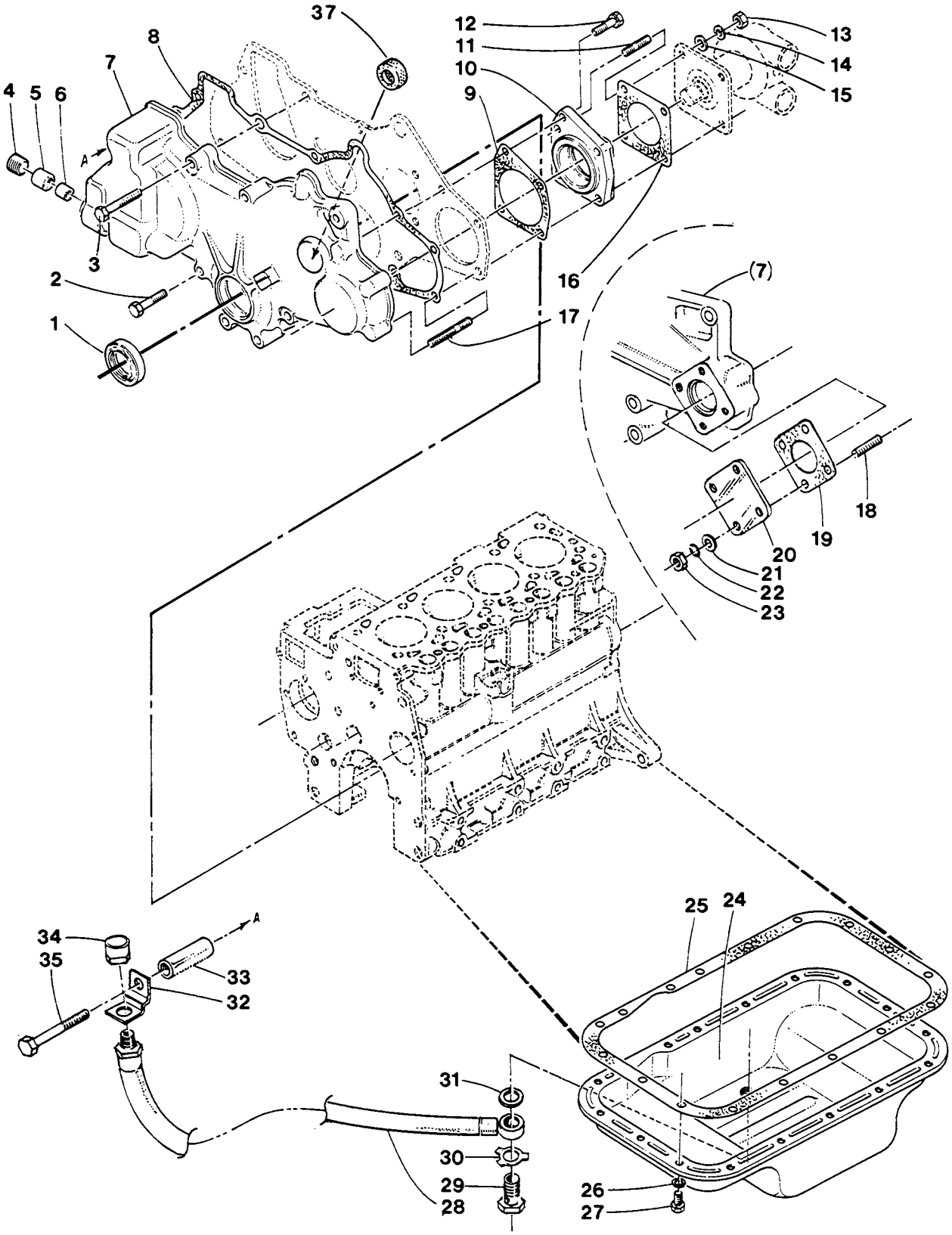

WESTERBEKE 18-21-27-33 - TIMING COVER AND SUMP

REF	PN	NAME	REMARKS	QUAN
28- 1	31173	HOSE	SUMP DRAIN-W21-27-27A	1
28- 2	30848	HOSE	SUMP DRAIN-W33-33A	1
28- 3	30846	HOSE	SUMP DRAIN-W27-33 V-DRIVE	1
28- 4	31084	HOSE	SUMP DRAIN-W18-21A	1
28- 5	34746	HOSE	SUMP DRAIN-BT-8KW	1
29- 1	24782	BOLT	BANJO-SUMP DRAIN	1
29- 2		LOC-TITE	PST MUST BE USED	
30	24913	TABWASHER		1
31	24973	WASHER	BANJO	1
32	24922	BRACKET	SUMP DRAIN HOSE	1
33- 1	30737	SPACER	BRACKET-W21-27-33	1
33- 2	33565	SPACER	ALTERNATOR STRAP-W18-21A-27A-33A	1
34	24905	CAP	SUMP DRAIN HOSE	1
35- 1	22211	CAPSCREW	M8 X 90 DIN 931-W21-27-33	1
35- 2	31817	CAPSCREW	M8 X 105 DIN 931-W18-21A-27A-33A	1
36- 1	31172	KIT	SUMP DRAIN HOSE-REF 28-35-W21-27	1
36- 2	30746	KIT	SUMP DRAIN HOSE-REF 28-35-W33	1
36- 3	33517	KIT	SUMP DRAIN HOSE-REF 28-35-W27-33 V-DRIVE	1
37	33278	PLUG	THRUST-TIMING COVER-W33 FROM S/N 4844	1

WESTERBEKE 13-18-21-27-33 - CRANKSHAFT AND PISTONS

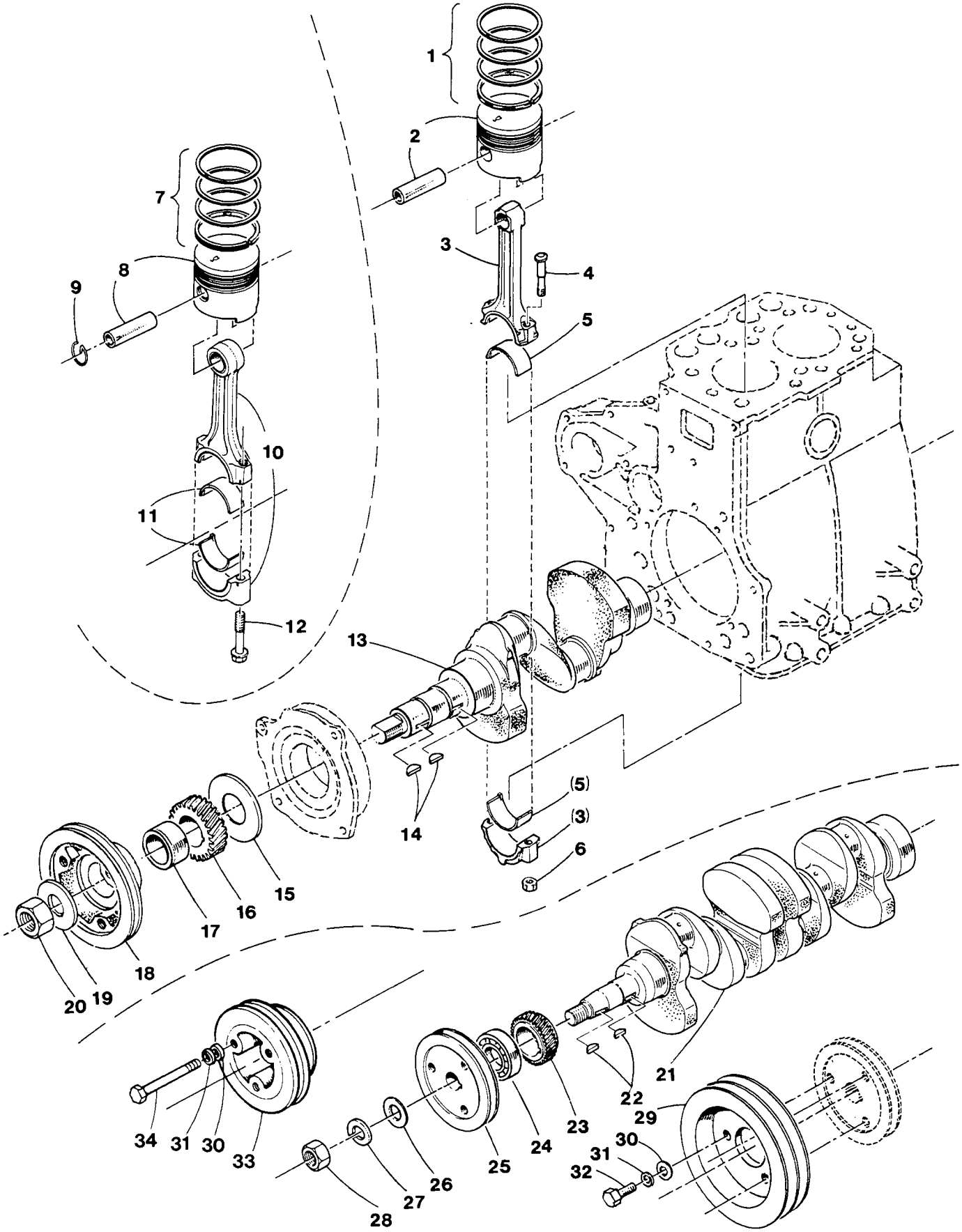

REF	PN	NAME	REMARKS	QUAN
1- 1	030529	RING SET	STD W13	2
1- 2	030522	RING SET	0.25 W13	2
1- 3	030523	RING SET	0.50 W13	2
1- 4	030524	RING SET	0.75 W13	2
1- 5	030417	RING SET	STD W21 TO S/N 49606	3
1- 6	030418	RING SET	0.25 W21 TO S/N 49606	3
1- 7	030419	RING SET	0.50 W21 TO S/N 49606	3
1- 8	030420	RING SET	0.75 W21 TO S/N 49606	3
1- 9	037271	RING SET	STD W21 FR S/N 49607	3
1-10	037272	RING SET	0.25 W21 FR S/N 49607	3
1-11	037273	RING SET	0.50 W21 FR S/N 49607	3
1-12	037274	RING SET	0.75 W21 FR S/N 49607	3
1-13	030417	RING SET	STD W27 TO S/N 21804	4
1-14	030418	RING SET	0.25 W27 TO S/N 21804	4
1-15	030419	RING SET	0.50 W27 TO S/N 21804	4
1-16	030420	RING SET	0.75 W27 TO S/N 21804	4
1-17	037271	RING SET	STD W27 FR S/N 21805	4
1-18	037272	RING SET	0.25 W27 FR S/N 21805	4
1-19	037273	RING SET	0.50 W27 FR S/N 21805	4
1-20	037274	RING SET	0.75 W27 FR S/N 21805	4
1-21	033787	RING SET	STD W18	3
1-22	033788	RING SET	0.25 W18	3
1-23	033789	RING SET	0.50 W18	3
1-24	033790	RING SET	0.75 W18	3
2- 1	030525	PISTON	WITH PIN STD W13	2
2- 2	030526	PISTON	WITH PIN 0.25 W13	2
2- 3	030527	PISTON	WITH PIN 0.50 W13	2
2- 4	030528	PISTON	WITH PIN 0.75 W13	2
2- 5	030425	PISTON	WITH PIN STD W21 TO S/N 49606	3
2- 6	030426	PISTON	WITH PIN 0.25 W21 TO S/N 49606	3
2- 7	030427	PISTON	WITH PIN 0.50 W21 TO S/N 49606	3
2- 8	030428	PISTON	WITH PIN 0.75 W21 TO S/N 49606	3
2- 9	037275	PISTON	WITH PIN STD W21 S/N 49607-62494	3
2-10	037276	PISTON	WITH PIN 0.25 W21 S/N 49606-62494	3
2-11	037277	PISTON	WITH PIN 0.50 W21 S/N 49607-62494	3
2-12	037278	PISTON	WITH PIN 0.75 W21 S/N 49607-62494	3
2-13	037683	PISTON	WITH PIN STD W21 FR S/N 62495	3
2-14	037684	PISTON	WITH PIN 0.25 W21 FR S/N 62495	3
2-15	037685	PISTON	WITH PIN 0.50 W21 FR S/N 62495	3
2-16	037686	PISTON	WITH PIN 0.75 W21 FR S/N 62495	3
2-17	030425	PISTON	WITH PIN STD W27 TO S/N 21804	4
2-18	030426	PISTON	WITH PIN 0.25 W27 TO S/N 21804	4
2-19	030427	PISTON	WITH PIN 0.50 W27 TO S/N 21804	4
2-20	030428	PISTON	WITH PIN 0.75 W27 TO S/N 21804	4
2-21	037275	PISTON	WITH PIN STD W27 S/N 21505-23328	4
2-22	037276	PISTON	WITH PIN 0.25 W27 S/N 21805-23328	4
2-23	037277	PISTON	WITH PIN 0.50 W27 S/N 21805-23328	4
2-24	037278	PISTON	WITH PIN 0.75 W27 S/N 21805-23328	4
2-25	037683	PISTON	WITH PIN STD W27 FR S/N 23329	4
2-26	037684	PISTON	WITH PIN 0.25 W27 FR S/N 23329	4
2-27	037685	PISTON	WITH PIN 0.50 W27 FR S/N 23329	4
2-28	037686	PISTON	WITH PIN 0.75 W27 FR S/N 23329	4

WESTERBEKE 13-18-21-27-33 - CRANKSHAFT AND PISTONS

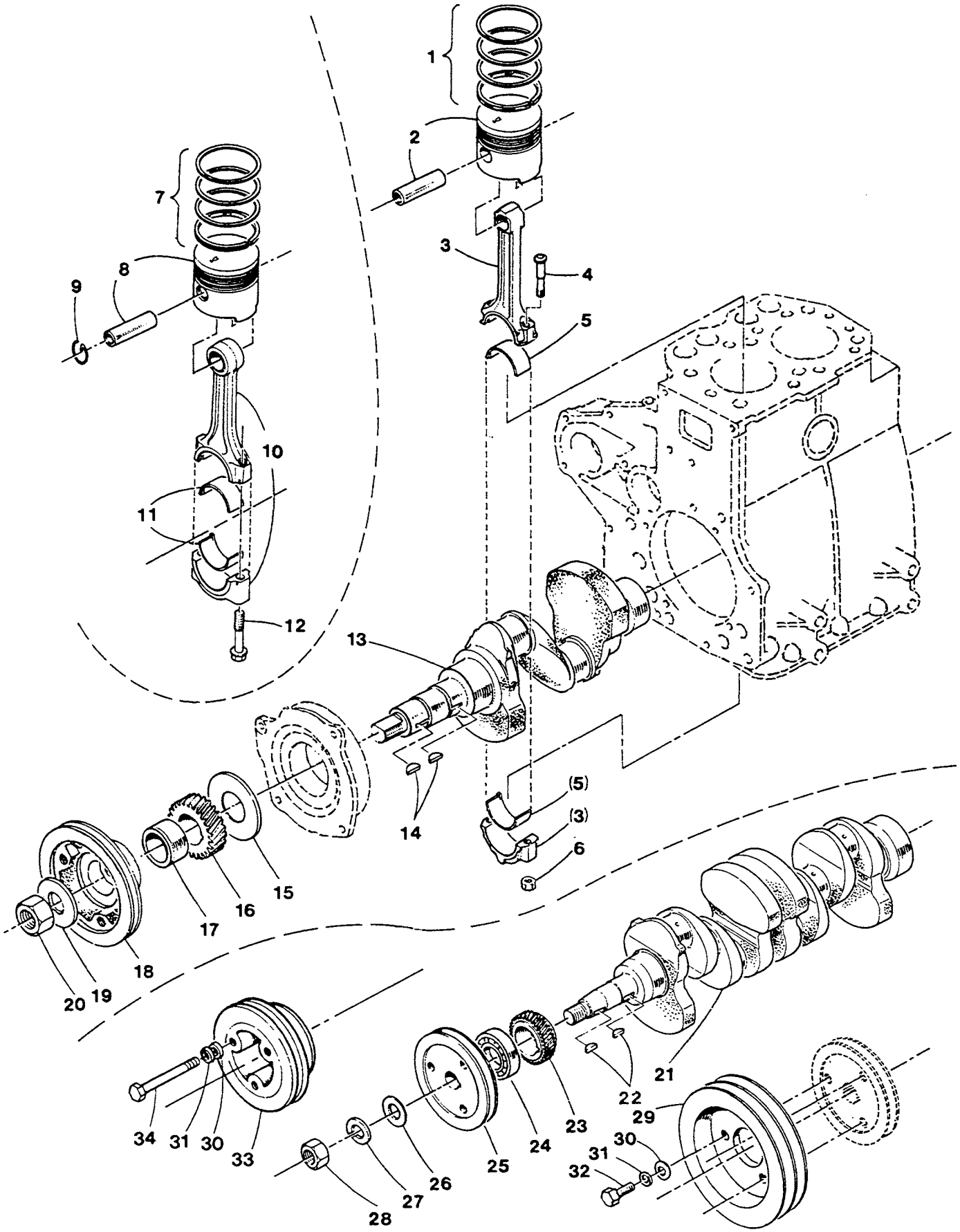

REF	PN	NAME	REMARKS	QUAN
2-29	033795	PISTON	WITH PIN STD W18	3
2-30	033796	PISTON	WITH PIN 0.25 W18	3
2-31	033797	PISTON	WITH PIN 0.50 W18	3
2-32	033798	PISTON	WITH PIN 0.75 W18	3
3- 1	030530	ROD	CONNECTING W13	2
3- 2	030530	ROD	CONNECTING W18-21	3
3- 3	030530	ROD	CONNECTING W27	4
4- 1	030351	BOLT	CONNECTING ROD W13	4
4- 2	030351	BOLT	CONNECTING ROD W18-21	6
4- 3	030351	BOLT	CONNECTING ROD W27	8
5- 1	037673	BEARING	CONNECTING ROD SET STD W13	2
5- 2	037680	BEARING	CONNECTING ROD SET 0.25 W13	2
5- 3	037681	BEARING	CONNECTING ROD SET 0.50 W13	2
5- 4	037682	BEARING	CONNECTING ROD SET 0.75 W13	2
5- 5	037673	BEARING	CONNECTING ROD SET STD W18-21	3
5- 6	037680	BEARING	CONNECTING ROD SET 0.25 W18-21	3
5- 7	037681	BEARING	CONNECTING ROD SET 0.50 W18-21	3
5- 8	037682	BEARING	CONNECTING ROD SET 0.75 W18-21	3
5- 9	037673	BEARING	CONNECTING ROD SET STD W27	4
5-10	037680	BEARING	CONNECTING ROD SET 0.25 W27	4
5-11	037681	BEARING	CONNECTING ROD SET 0.50 W27	4
5-12	037682	BEARING	CONNECTING ROD SET 0.75 W27	4
6- 1	030231	NUT	CONNECTING ROD BOLT W13	4
6- 2	030231	NUT	CONNECTING ROD BOLT W18-21	6
6- 3	030231	NUT	CONNECTING ROD BOLT W27	8
7- 1	030421	RING SET	STD W33 TO S/N 8230	4
7- 2	030422	RING SET	0.25 W33 TO S/N 8230	4
7- 3	030423	RING SET	0.50 W33 TO S/N 8230	4
7- 4	030424	RING SET	0.75 W33 TO S/N 8230	4
7- 5	037282	RING SET	STD W33 FR S/N 8231	4
7- 6	037283	RING SET	0.25 W33 FR S/N 8231	4
7- 7	037284	RING SET	0.50 W33 FR S/N 8231	4
7- 8	037285	RING SET	0.75 W33 FR S/N 8231	4
8- 1	030414	PISTON	WITH PIN STD W33 TO S/N 8230	4
8- 2	030429	PISTON	WITH PIN 0.25 W33 TO S/N 8230	4
8- 3	030430	PISTON	WITH PIN 0.50 W33 TO S/N 8230	4
8- 4	030431	PISTON	WITH PIN 0.75 W33 TO S/N 8230	4
8- 5	037290	PISTON	WITH PIN STD W33 FR S/N 8231	4
8- 6	037291	PISTON	WITH PIN 0.25 W33 FR S/N 8231	4
8- 7	037292	PISTON	WITH PIN 0.50 W33 FR S/N 8231	4
8- 8	037293	PISTON	WITH PIN 0.75 W33 FR S/N 8231	4
9	030205	CIRCLIP	PISTON PIN RETAINING W33	8
10	030304	ROD	CONNECTING W33	4
11- 1	030305	BEARING	CONNECTING ROD SET STD W33	4
11- 2	030306	BEARING	CONNECTING ROD SET 0.25 W33	4
11- 3	030307	BEARING	CONNECTING ROD SET 0.50 W33	4
11- 4	030308	BEARING	CONNECTING ROD SET 0.75 W33	4
12	030384	BOLT	CONNECTING ROD W33	8

WESTERBEKE 13-18-21-27-33 - CRANKSHAFT AND PISTONS

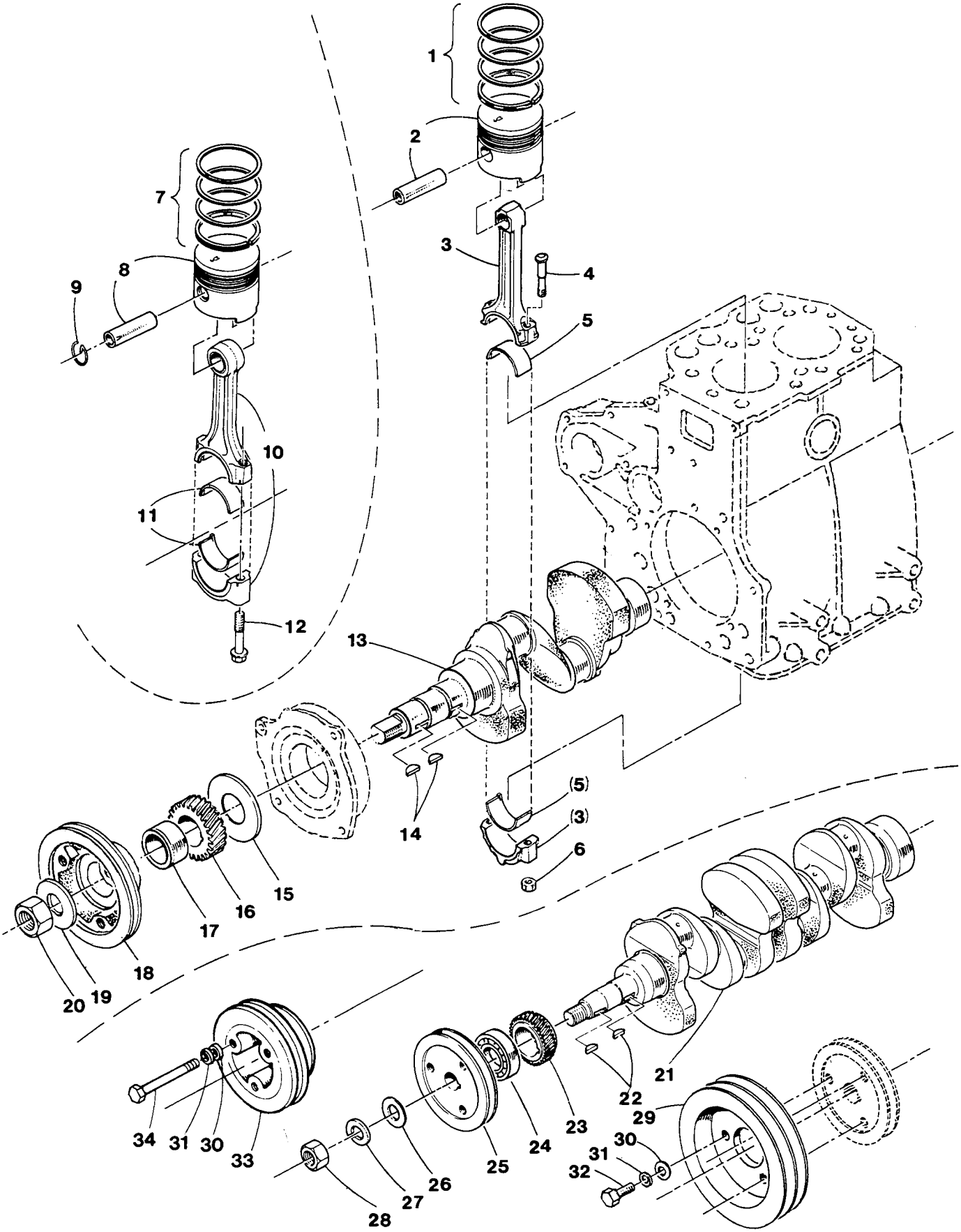

WESTERBEKE 13-18-21-27-33 - CRANKSHAFT AND PISTONS

REF	PN	NAME	REMARKS	QUAN
13	030352	CRANKSHAFT	W13	1
14	030276	KEY	W13	2
15	030303	PLATE	CRANKSHAFT W13	1
16	030302	GEAR	CRANKSHAFT W13	1
17	030358	SLEEVE	W13	1
18	030353	PULLEY	CRANKSHAFT W13	1
19	030216	WASHER	M24 W13	1
20	032174	NUT	CRANKSHAFT PULLEY W13	1
21- 1	030535	CRANKSHAFT	W18-21	1
21- 2	030537	CRANKSHAFT	W27	1
21- 3	030415	CRANKSHAFT	W33	1
22	030275	KEY	W18-21-27-33	1
23	030416	GEAR	CRANKSHAFT W18-21-27-33	1
24	030217	BEARING	CRANKSHAFT W33	1
25- 1	032181	PULLEY	CRANKSHAFT W18-21	1
25- 2	032182	PULLEY	CRANKSHAFT W27-33	1
26- 1	032175	WASHER	FLAT M18 W18-21-27	1
26- 2	032178	WASHER	FLAT M20 W33	1
27- 1	032176	LOCKWASHER	M18 W18-21-27	1
27- 2	032177	LOCKWASHER	M20 W33	1
28- 1	032172	NUT	M18 W18-21-27	1
28- 2	032173	NUT	M20 W33	1
29- 1	031163	PULLEY	ACCESSORY CRANKSHAFT 5IN	1
29- 2	031164	PULLEY	ACCESSORY CRANKSHAFT 6IN	1
29- 3	031165	PULLEY	ACCESSORY CRANKSHAFT 7IN	1
30	031789	WASHER	M10 DIN 125	3
31	019262	LOCKWASHER	M10 DIN 127	3
32- 1	031822	CAPSCREW	M10 X 1.25 X 75 DIN 961 PULLEY 31163	3
32- 2	024953	CAPSCREW	M10 X 1.25 X 35 DIN 961 PULLEY 31164-5	3
33- 1	033930	PULLEY	DRIVE ALTERNATOR-PUMP W18-21A-27A	1
33- 2	034720	PULLEY	DRIVE ALTERNATOR-PUMP W33A	1
34	031819	CAPSCREW	M10x1.25x60 DIN 961 PULLEY 33930-34720	3
35	036520	BUSHING	CONNECTING ROD W33	4

WESTERBEKE 13-18-21-27-33 - CAMSHAFT AND ROCKER SHAFT

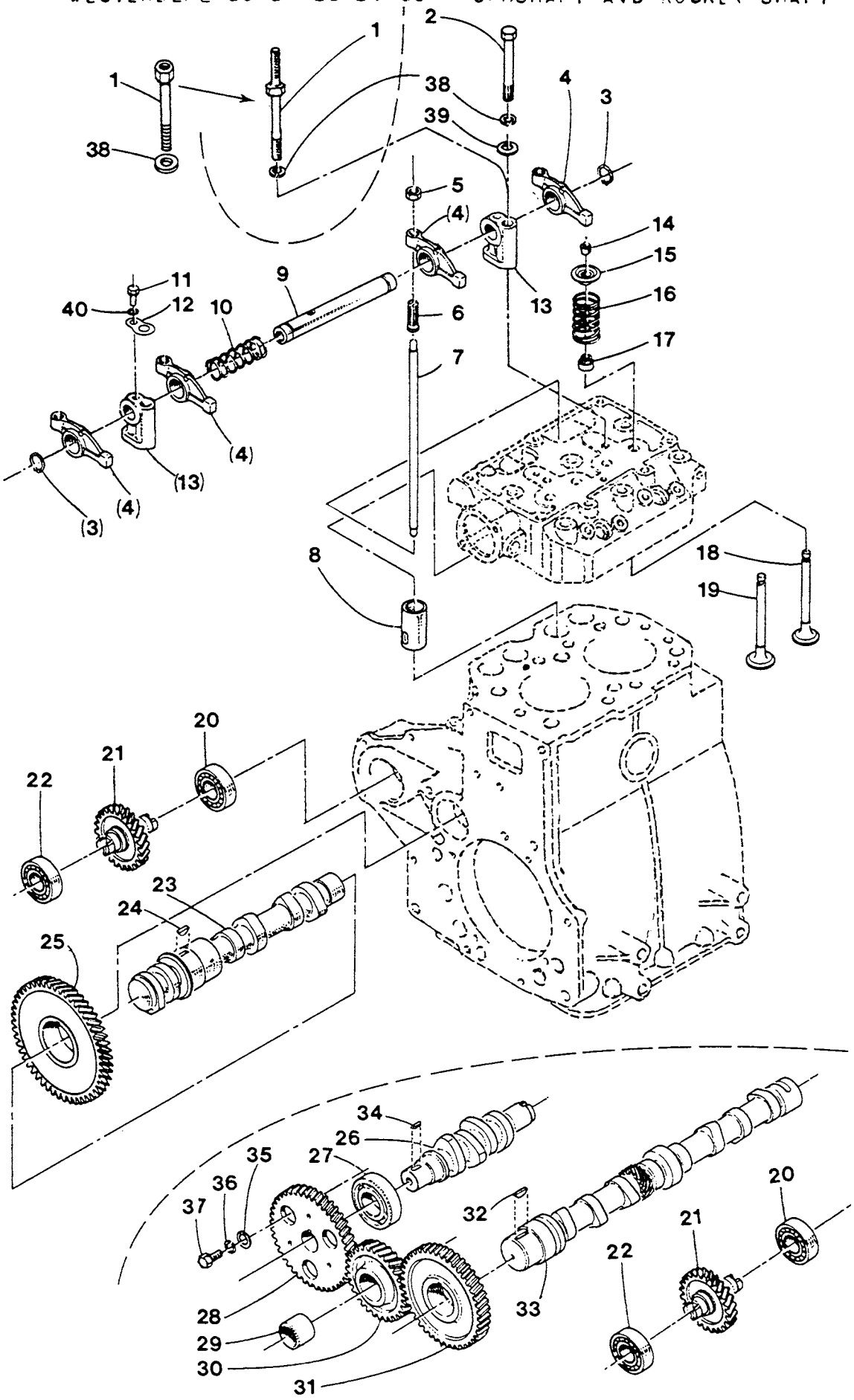

WESTERBEKE 13-18-21-27-33 - CAMSHAFT AND ROCKER SHAFT

REF	PN	NAME	REMARKS	QUAN
1-1	030545	STUD	BRACKET & COVER W21 TO S/N 27902	2
1-2	034671	BOLT	BRACKET & COVER W21 FR S/N 27903	2
1-3	030545	STUD	BRACKET & COVER W18 TO S/N 27075	2
1-4	034671	BOLT	BRACKET & COVER W18 FR S/N 27076	2
1-5	030545	STUD	BRACKET & COVER W27	2
2-1	031821	CAPSCREW	M10 X 1.25 X 70 DIN 961 W13-27	2
2-2	031821	CAPSCREW	M10 X 1.25 X 70 DIN 961 W18-21	1
2-3	031823	CAPSCREW	M10 X 1.25 X 80 DIN 961 W33	4
3	030279	SNAPRING		2
4-1	030362	ROCKER	ARM W13	4
4-2	030438	ROCKER	ARM W18-21	6
4-3	030438	ROCKER	ARM W27-33	8
5-1	031804	NUT	M10 X 1.25 JAM W13	4
5-2	031804	NUT	M10 X 1.25 JAM W18-21	6
5-3	031804	NUT	M10 X 1.25 JAM W27-33	8
6-1	030195	SCREW	ADJUSTING W13	4
6-2	030195	SCREW	ADJUSTING W18-21	6
6-3	030195	SCREW	ADJUSTING W27-33	8
7-1	030360	PUSHROD	W13	4
7-2	030542	PUSHROD	W18-21	6
7-3	030542	PUSHROD	W27	8
7-4	030196	PUSHROD	W33	8
8-1	030361	TAPPET	W13	4
8-2	030361	TAPPET	W18-21	6
8-3	030361	TAPPET	W27-33	8
9-1	030363	SHAFT	ROCKER ASSEMBLY W13	1
9-2	030543	SHAFT	ROCKER ASSEMBLY W18-21	1
9-3	030544	SHAFT	ROCKER ASSEMBLY W27	1
9-4	030439	SHAFT	ROCKER ASSEMBLY W33	1
10-1	030232	SPRING	ROCKER SHAFT W13	1
10-2	030232	SPRING	ROCKER SHAFT W18-21	2
10-3	030232	SPRING	ROCKER SHAFT W27-33	3
11	017012	CAPSCREW	M 6 X 16 DIN 933	2
12	030440	WASHER		2
13-1	030299	BRACKET	ROCKER SHAFT W13	2
13-2	030299	BRACKET	ROCKER SHAFT W18-21	3
13-3	030299	BRACKET	ROCKER SHAFT W27	4
13-4	032168	BRACKET	ROCKER SHAFT W33	4
14-1	030241	LOCK	VALVE W13	8
14-2	030241	LOCK	VALVE W18-21	12
14-3	030241	LOCK	VALVE W27	16
14-4	030228	LOCK	VALVE W33 USE WITH 30236 SEAT	16
14-5	037998	LOCK	VALVE W33 USE WITH 37999 SEAT	16
15-1	030240	SEAT	VALVE SPRING UPPER W13	4
15-2	030240	SEAT	VALVE SPRING UPPER W18-21	6
15-3	030240	SEAT	VALVE SPRING UPPER W27	8
15-4	030236	SEAT	VALVE SPRING UPPER W33 14 MM ID	8
15-5	037998	SEAT	VALVE SPRING UPPER W33 11 MM ID	8
16-1	030346	SPRING	VALVE W13	4
16-2	030346	SPRING	VALVE W18-21	6
16-3	030346	SPRING	VALVE W27	8
16-4	030227	SPRING	VALVE W33	8

WESTERBEKE 13-18-21-27-33 - CAMSHAFT AND ROCKER SHAFT

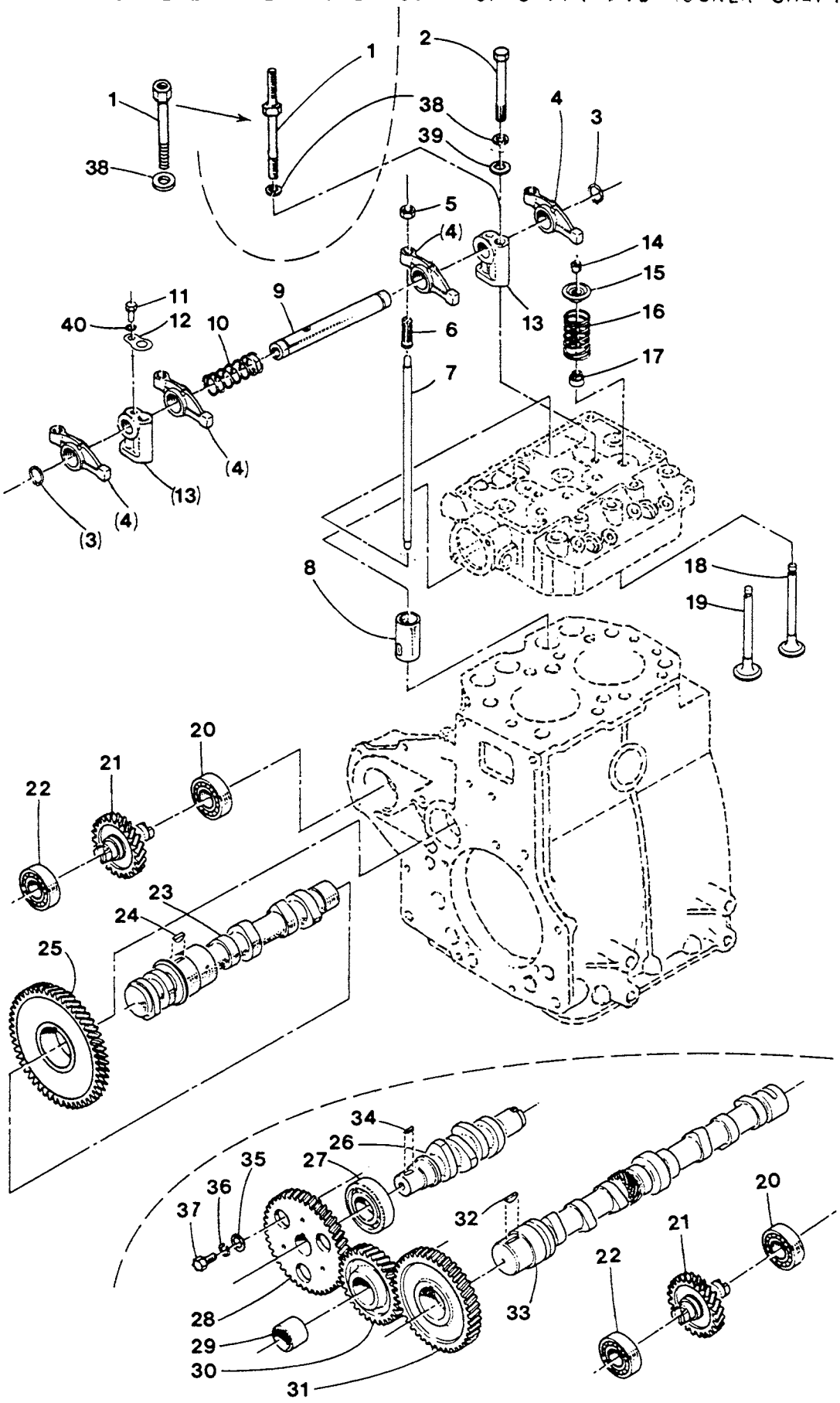

WESTERBEKE 13-18-21-27-33 - CAMSHAFT AND ROCKER SHAFT

REF	PN	NAME	REMARKS	QUAN
17-1	030242	SEAL	OIL W13	4
17-2	030242	SEAL	OIL W18-21	6
17-3	030242	SEAL	OIL W27	8
17-4	030218	SEAL	OIL W33 TO S/N 4662 ONLY	8
17-5	033277	SEAL	OIL W33 ALL	8
18-1	030338	VALVE	EXHAUST W13	2
18-2	030510	VALVE	EXHAUST W18-21	3
18-3	030510	VALVE	EXHAUST W27	4
18-4	030442	VALVE	EXHAUST W33	4
19-1	030337	VALVE	INTAKE W13	2
19-2	030508	VALVE	INTAKE W18-21	3
19-3	030508	VALVE	INTAKE W27	4
19-4	030441	VALVE	INTAKE W33	4
20-1	030202	BEARING	PUMP GEAR W13	1
20-2	030198	BEARING	PUMP GEAR W18-21-27-33	1
21-1	030324	GEAR	SEA WATER PUMP DRIVE W13	1
21-2	030590	GEAR	SEA WATER PUMP DRIVE W18-21-27-33	1
22-1	030202	BEARING	PUMP GEAR W13-18-21-27	1
22-2	030270	BEARING	PUMP GEAR W33	1
23	030359	CAMSHAFT	W13	1
24	030274	KEY	GEAR TO CAMSHAFT W13	1
25	030309	GEAR	CAMSHAFT W13	1
26-1	030546	CAMSHAFT	INJECTION PUMP W18-21	1
26-2	030547	CAMSHAFT	INJECTION PUMP W27	1
26-3	030433	CAMSHAFT	INJECTION PUMP W33	1
27	030434	BEARING	INJECTION PUMP CAMSHAFT W18-21-27-33	1
28	030435	GEAR	INJECTION PUMP CAMSHAFT W18-21-27-33	1
30-1	030541	GEAR	IDLER W18-21-27	1
30-2	030432	GEAR	IDLER W33	1
31	030437	GEAR	CAMSHAFT W18-21-27-33	1
32	030275	KEY	GEAR TO CAMSHAFT W18-21-27-33	1
33-1	030539	CAMSHAFT	W18 TO S/N 31605	1
33-2	037280	CAMSHAFT	W18 FR S/N 31606	1
33-3	030539	CAMSHAFT	W21 TO S/N 49606	1
33-4	037280	CAMSHAFT	W21 FR S/N 49607	1
33-5	030540	CAMSHAFT	W27 TO S/N 21804	1
33-6	037279	CAMSHAFT	W27 FR S/N 21805	1
33-7	030436	CAMSHAFT	W33 TO S/N 8038	1
33-8	037281	CAMSHAFT	W33 FR S/N 8039	1
34	030273	KEY	GEAR TO SHAFT W18-21-27-33	1
35	031787	WASHER	M 8 DIN 125 W18-21-27-33	1
36	031786	LOCKWASHER	M 8 DIN 127 W18-21-27-33	1
37	016789	CAPSCREW	M 8 X 16 DIN 933 W18-21-27-33	1
38-1	019262	LOCKWASHER	M10 DIN 127 W13	2
38-2	019262	LOCKWASHER	M10 DIN 127 W18-21	3
38-3	019262	LOCKWASHER	M 8 DIN 127 W27-33	4
39	031789	WASHER	M10 DIN 125 W33	2
40	031783	LOCKWASHER	M 6 DIN 127	2